ultrasonic sensor
diffuse mode sensor
RUC600-M3065-LIAP8X-H1151

TURCK
Industrial Automation

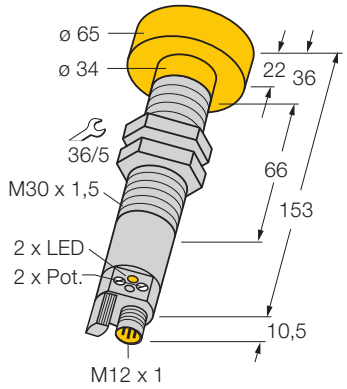

- **lower and upper switching limit adjustable via potentiometer**
- **further parameters (e.g. analogue range) adjustable via programming device RU-PDI (accessories)**
- **analogue output, 4…20 mA**
- **pnp transistor output (normally open)**
- **synchronizable**
- **opening angle of sonic cone 6°**

Type	RUC600-M3065-LIAP8X-H1151
Ident-No.	1840630
Range	60… 600 cm
Ultrasound frequency	80 kHz
Repeatability	≥ ± 9 mm
Edge lengths of the nominal actuator	100 mm
Pass speed	3.7 m/s
Approach speed	18 m/s
Ambient temperature	-25…+ 70 °C
Operating voltage	20… 30VDC
DC rated operational current	300 mA
No-load current I_0	50 mA
Output function	normally open, PNP/analogue output
Current output	4… 20 mA
Load resistance	300 Ω
Short-circuit protection	yes / cyclic
Reverse polarity protection	complete
Switching frequency	1 Hz
Voltage drop at I_e	3V
Wire breakage protection	yes
Housing	cylindrical/threaded, M30
Dimensions	163.5 mm
Housing diameter	65 mm
Thread length	66 mm
Housing material	metal, CuZn, nickel-plated
Connection	connectors, M12 x 1
Degree of protection	IP65
Display switch state	LED yellow

Wiring diagram

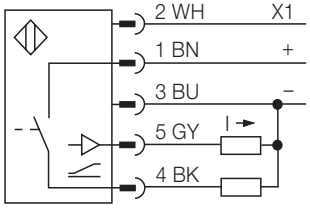

Functional principle

Ultrasonic sensors use ultrasonic waves for non-contact and wear-free detection of a large variety of objects. It does not matter whether the object is transparent or opaque, metallic or non-metallic, or of liquid, solid or powdery consistence. Environmental conditions such as spray, dust or rain hardly affect their function.

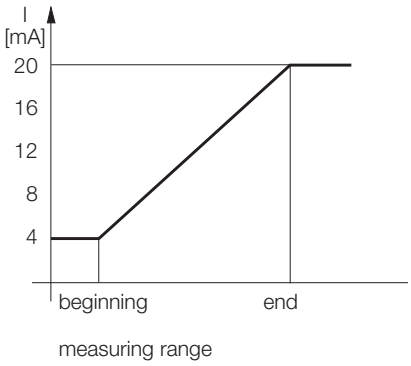

• Edition: • 08.11.2008

Casp System Sp. Z o.o., Puszkina 2, 43-603 Jaworzno, Polska, www.casp.pl, e-mail: biuro@casp.pl, tel/fax: +48 32 614 09 17

ultrasonic sensor
diffuse mode sensor
RUC600-M3065-LIAP8X-H1151

Industrial Automation

Accessories

Type code	Ident-No.	Short text	Dimension drawing
RU-PDI	1890000	programming device for configuration of ultrasonic sensor types RU…-M18 and RUC…-M30	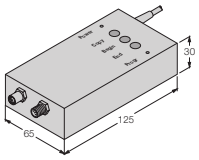

• Edition: • 08.11.2008