Inductive sensor
with analogue output
Ni50-Q80-LiU-H1141

TURCK
Industrial Automation

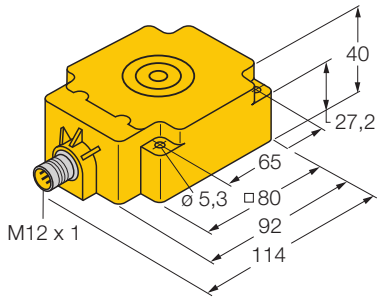

- **rectangular, height 40 mm**
- **top active face**
- **Plastic, PBT-GF30-V0**
- **analogue +**
- **extended sensing range**
- **4-wire, 15…30 VDC**
- **analogue output**
- **0…10 V and 0…20 mA**
- **connector, M12 x 1**

Type	Ni50-Q80-LiU-H1141
Ident-No.	1535545
Measuring range [A…B]	10… 50 mm
Mounting condition	non-flush
Correction factors	St37 = 1, V2A ~ 0.7, Ms ~ 0.4, Al ~ 0.3
Repeatability	1 % of measuring range |A - B| 0.5 %, after a warm-up time of 0.5 h
Reproducibility	400µm 200µm, after a warm-up time of 0.5 h
Linearity deviation	5% of full scale
Temperature drift	± 0.06 %/K
Ambient temperature	-25…+ 70 °C
Operating voltage	15… 30VDC
Residual ripple	10 % U_{ss}
No-load current I_0	8 mA
Rated insulation voltage	0.5 kV
Short-circuit protection	yes
Wire breakage / Reverse polarity protection	yes / complete
Output function	4-wire, analogue output
voltage output	0… 10 V
Current output	0… 20 mA
Load resistance voltage output	≥ 4.7 kΩ
Load resistance current output	0.4 kΩ
Measuring sequence frequency	30 Hz
Output recovery time	12 ms
Housing	rectangular, Q80
Dimensions	92 x 80 x 40 mm
Housing material	plastic, PBT-GF30-V0, black
Material active face	plastic, PBT-GF30-V0, black
Connection	connectors, M12 x 1
Vibration resistance	55 Hz (1 mm)
Shock resistance	30g (11 ms)
Degree of protection	IP67

Wiring diagram

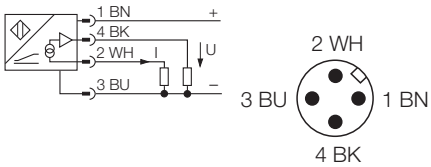

Functional principle

Simple control tasks can be accomplished with inductive TURCK sensors featuring an analogue output. They provide a current, voltage or frequency signal that is proportional to the target's distance. With TURCK's analogue sensors, this output signal is linear to the distance of the target over the entire sensing range.

Measuring range

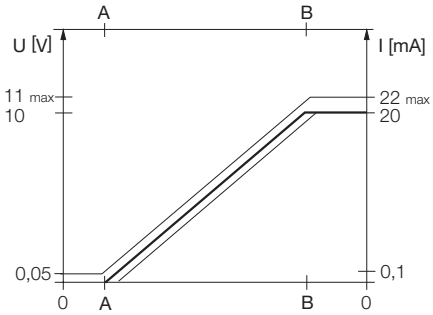

• Edition: • 08.11.2008

Inductive sensor
with analogue output
Ni50-Q80-LiU-H1141

Industrial Automation

Mounting instructions	minimum distances
Distance D	3 x B
Distance W	3 x Sn
Distance S	1,5 x B
Distance G	6 x Sn
Distance A	1 x B
Distance C	1 x B

Width of the active face B	80 mm

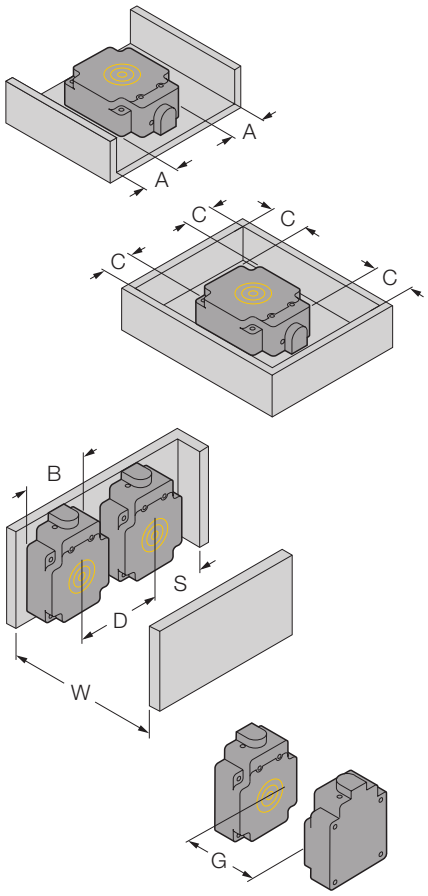

• Edition: • 08.11.2008

Inductive sensor
with analogue output
Ni50-Q80-LiU-H1141

Industrial
Automation

Accessories

Type code	Ident-No.	Short text	Dimension drawing
IM43-13-SR	7540041	limit value monitor; single channel; input 0/4…20 mA or 0/2…10 V; supply of 2- or 3-wire transmitters/sensors; limit value adjustment via teach button; three relay outputs with one normally open contact each; removable terminal blocks; 27 mm wide; universal voltage supply 20…250 VUC; further limit value monitors are described in our "Interface Technology" catalogue.	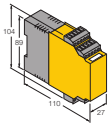

• Edition: • 08.11.2008