Inductive sensor
Ni60-K90SR-VP4X2

Industrial Automation

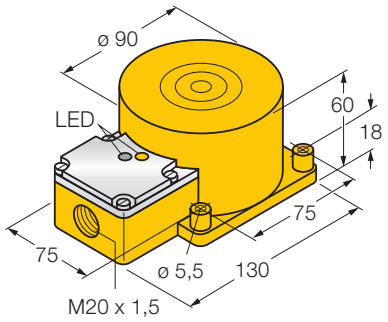

- **rectangular, height 60 mm**
- **Plastic, PBT-GF30-V0**
- **4-wire DC, 10…65 VDC**
- **change-over, pnp output**
- **Terminal chamber**

Wiring diagram

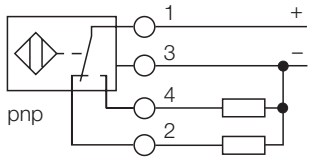

Type	Ni60-K90SR-VP4X2
Ident-No.	15640
Rated operating distance Sn	60 mm
Mounting condition	non-flush
Assured sensing range	(0,81 x Sn) mm
Correction factors	St37 = 1, V2A ~ 0.7, Ms ~ 0.4, Al ~ 0.3
Repeatability	2 %
Temperature drift	± 10 %
Hysteresis	3… 15 %
Ambient temperature	-25…+ 70 °C
Operating voltage	10… 65VDC
Residual ripple	10 % U_{ss}
DC rated operational current	200 mA
No-load current I_0	15 mA
Residual current	0.1 mA
Rated insulation voltage	0.5 kV
Short-circuit protection	yes / cyclic
Voltage drop at I_e	1.8V
Wire breakage / Reverse polarity protection	yes / complete
Output function	4-wire, change-over, pnp
Switching frequency	0.06 kHz
Housing	rectangular, K90SR
Dimensions	130 x 75 x 60 mm
Housing material	plastic, PBT-GF30-V0
Material active face	plastic, PBT-GF30-V0
Connection	Terminal chamber
Clamping ability	2.5mm^2
Vibration resistance	55 Hz (1 mm)
Shock resistance	30g (11 ms)
Degree of protection	IP67
Operating voltage display	LED green
Display switch state	LED yellow
Included in scope of supply	cable gland

Functional principle

Inductive sensors are designed for wear-free and non-contact detection of metal objects. For this purpose they use a high-frequency electro-magnetic AC field that interacts with the target. Conserning inductive sensors, this field is generated by an LC resonant circuit with a ferrite core coil.

• Edition: • 08.11.2008

Casp System Sp. Z o.o., Puszkina 2, 43-603 Jaworzno, Polska, www.casp.pl, e-mail: biuro@casp.pl, tel/fax: +48 32 614 09 17

Inductive sensor
Ni60-K90SR-VP4X2

Mounting instructions	minimum distances
Distance D	3 x B
Distance W	3 x Sn
Distance S	1,5 x B
Distance G	6 x Sn
Distance A	1 x Sn
Distance C	2 x Sn

Width of the active face B	90 mm

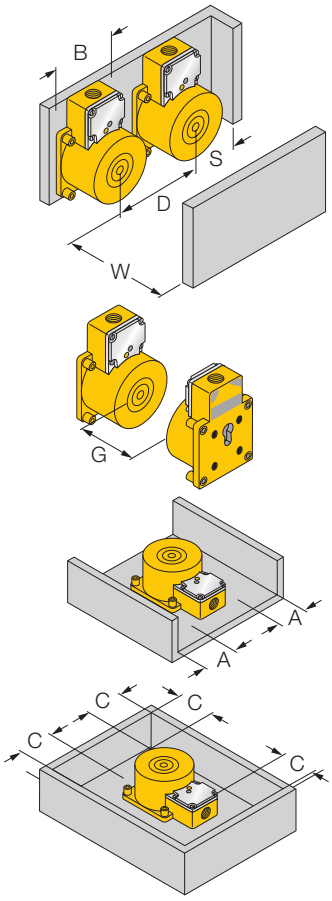

• Edition: • 08.11.2008

Inductive sensor
Ni60-K90SR-VP4X2

TURCK
Industrial
Automation

• Edition: • 08.11.2008