uprox®

Inductive sensor
with extended switching distance
Ni75U-CP80-FDZ30X2

TURCK
Industrial Automation

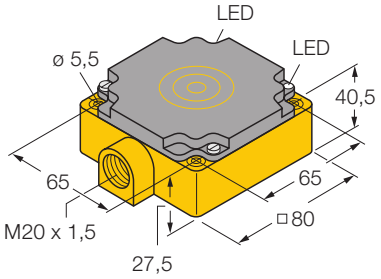

- **rectangular, height 41 mm**
- **Plastic, PBT-GF30-V0**
- **factor 1 for all metals**
- **magnetic field immune**
- **large detection range**
- **extended temperature range**
- **high switching frequency**
- **AC 2-wire, 20…250 VAC**
- **2-wire DC, 10…300 VDC**
- **connection programmable (n.c./ n.o.)**
- **Terminal chamber**

Type	Ni75U-CP80-FDZ30X2
Ident-No.	4280900
Rated operating distance Sn	75 mm
Mounting condition	non-flush
Assured sensing range	(0,81 x Sn) mm
Repeatability	2 %
Temperature drift	± 10 %
	± 15 %, -25 °C v ≥ +70 °C
Hysteresis	3… 15 %
Ambient temperature	-30…+ 85 °C
Operating voltage	20… 250VAC
Operating voltage	10… 300VDC
AC rated operational current	400 mA
DC rated operational current	300 mA
Frequency	50… 60 Hz
Residual current	1.7 mA
Rated insulation voltage	1.5 kV
Surge current	3 A (20 ms max. 5 Hz)
Short-circuit protection	yes / latching
Voltage drop at I_e	6V
Wire breakage / Reverse polarity protection	yes / complete
Output function	2-wire, connection programmable
Smallest operating current I_m	≥ 3 mA
Insulation class	
Switching frequency	0.06 kHz
Housing	rectangular, CP80
Dimensions	80 x 80 x 41 mm
Housing material	plastic, PBT-GF30-V0
Material active face	plastic, PBT-GF30-V0
Connection	Terminal chamber
Clamping ability	2.5mm^2
Vibration resistance	55 Hz (1 mm)
Shock resistance	30g (11 ms)
Degree of protection	IP67
Operating voltage display	LED green
Display switch state	LED yellow

Wiring diagram

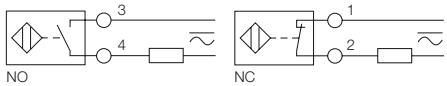

Functional principle

Inductive sensors are designed for wear-free and non-contact detection of metal objects. Due to a ferrite-less 3-coil system, uprox factor 1 sensors have distinct advantages. They detect all metals at the same switching distance, are magnetic field immune and feature large switching distances.

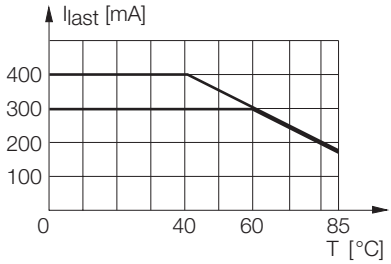

• Edition: • 08.11.2008

uprox®

Inductive sensor
with extended switching distance
Ni75U-CP80-FDZ30X2

TURCK
Industrial Automation

Mounting instructions	minimum distances
Distance D	3 x B
Distance W	3 x Sn
Distance S	1,5 x B
Distance G	6 x Sn
Distance A	1 x B
Distance C	1 x B

Width of the active face B	80 mm

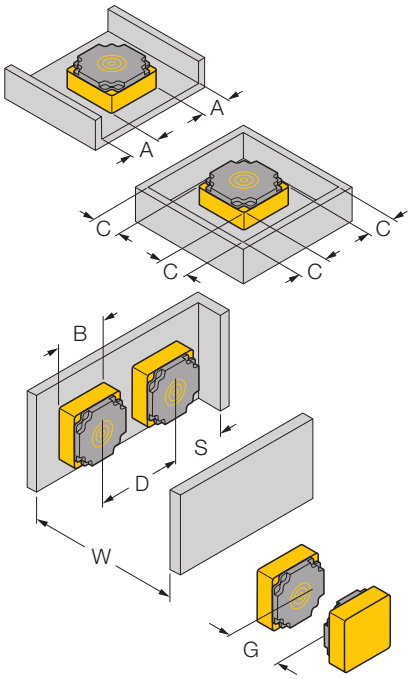

• Edition: • 08.11.2008

uprox®

Inductive sensor
with extended switching distance
Ni75U-CP80-FDZ30X2

TURCK
Industrial
Automation

• Edition: • 08.11.2008