uprox®

Inductive sensor
with extended switching distance
Ni75U-CP80-AN6X2

TURCK
Industrial Automation

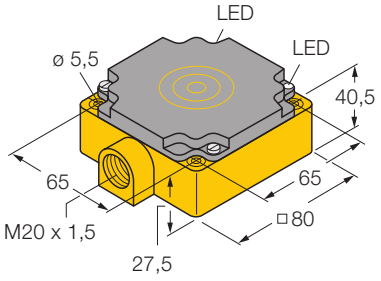

- **rectangular, height 41 mm**
- **Plastic, PBT-GF30-V0**
- **factor 1 for all metals**
- **magnetic field immune**
- **large detection range**
- **extended temperature range**
- **high switching frequency**
- **3-wire DC, 10…30 VDC**
- **normally open npn output**
- **Terminal chamber**

Type	Ni75U-CP80-AN6X2
Ident-No.	1623810
Rated operating distance Sn	75 mm
Mounting condition	non-flush
Assured sensing range	(0,81 x Sn) mm
Repeatability	2 %
Temperature drift	± 10 %
	± 15 %, -25 °C v ≥ +70 °C
Hysteresis	3… 15 %
Ambient temperature	-30…+ 85 °C
Operating voltage	10… 30VDC
Residual ripple	10 % U_{ss}
DC rated operational current	200 mA
No-load current I_0	15 mA
Residual current	0.1 mA
Rated insulation voltage	0.5 kV
Short-circuit protection	yes / cyclic
Voltage drop at I_e	1.8V
Wire breakage / Reverse polarity protection	yes / complete
Output function	3-wire, normally open, npn
Insulation class	
Switching frequency	0.25 kHz
Housing	rectangular, CP80
Dimensions	80 x 80 x 41 mm
Housing material	plastic, PBT-GF30-V0
Material active face	plastic, PBT-GF30-V0
Connection	Terminal chamber
Clamping ability	2.5mm^2
Vibration resistance	55 Hz (1 mm)
Shock resistance	30g (11 ms)
Degree of protection	IP67
Operating voltage display	LED green
Display switch state	LED yellow

Wiring diagram

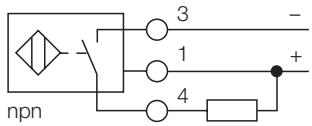

Functional principle

Inductive sensors are designed for wear-free and non-contact detection of metal objects. Due to a ferrite-less 3-coil system, uprox factor 1 sensors have distinct advantages. They detect all metals at the same switching distance, are magnetic field immune and feature large switching distances.

• Edition: • 08.11.2008

Casp System Sp. Z o.o., Puszkina 2, 43-603 Jaworzno, Polska, www.casp.pl, e-mail: biuro@casp.pl, tel/fax: +48 32 614 09 17

uprox®

Inductive sensor
with extended switching distance
Ni75U-CP80-AN6X2

TURCK
Industrial Automation

Mounting instructions	minimum distances
Distance D	3 x B
Distance W	3 x Sn
Distance S	1,5 x B
Distance G	6 x Sn
Distance A	1 x B
Distance C	1 x B

Width of the active face B	80 mm

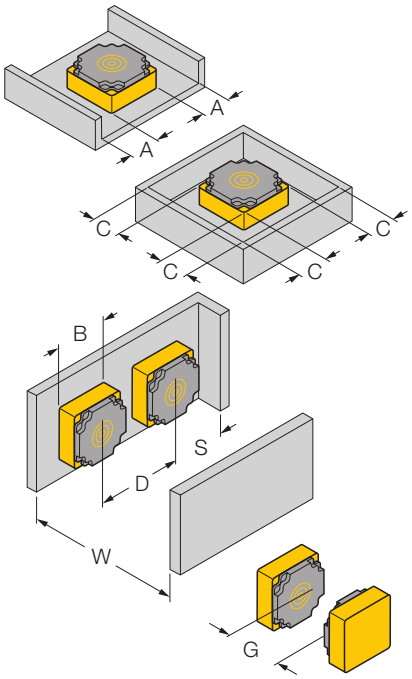

• Edition: • 08.11.2008

uprox®

Inductive sensor
with extended switching distance
Ni75U-CP80-AN6X2

TURCK
Industrial
Automation

• Edition: • 08.11.2008