uprox®

# Inductive sensor
# with extended switching distance
# Ni75U-CP80-AP6X2

TURCK
Industrial Automation

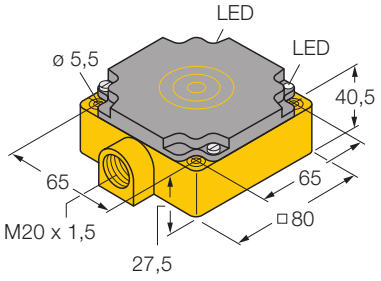


- **rectangular, height 41 mm**
- **Plastic, PBT-GF30-V0**
- **factor 1 for all metals**
- **magnetic field immune**
- **large detection range**
- **extended temperature range**
- **high switching frequency**
- **3-wire DC, 10…30 VDC**
- **normally open, pnp output**
- **Terminal chamber**

| | |
|---|---|
| **Type** | Ni75U-CP80-AP6X2 |
| Ident-No. | 1623800 |
| **Rated operating distance Sn** | 75 mm |
| Mounting condition | non-flush |
| Assured sensing range | (0,81 x Sn) mm |
| Repeatability | 2 % |
| Temperature drift | ± 10 % |
| | ± 15 %, -25 °C v ≥ +70 °C |
| Hysteresis | 3… 15 % |
| Ambient temperature | -30…+ 85 °C |
| **Operating voltage** | 10… 30VDC |
| Residual ripple | 10 % $U_{ss}$ |
| DC rated operational current | 200 mA |
| No-load current $I_0$ | 15 mA |
| Residual current | 0.1 mA |
| Rated insulation voltage | 0.5 kV |
| Short-circuit protection | yes / cyclic |
| Voltage drop at $I_e$ | 1.8V |
| Wire breakage / Reverse polarity protection | yes / complete |
| Output function | 3-wire, normally open, pnp |
| Insulation class | |
| Switching frequency | 0.25 kHz |
| **Housing** | rectangular, CP80 |
| Dimensions | 80 x 80 x 41 mm |
| Housing material | plastic, PBT-GF30-V0 |
| Material active face | plastic, PBT-GF30-V0 |
| Connection | Terminal chamber |
| Clamping ability | 2.5mm$^2$ |
| Vibration resistance | 55 Hz (1 mm) |
| Shock resistance | 30g (11 ms) |
| Degree of protection | IP67 |
| **Operating voltage display** | LED green |
| Display switch state | LED yellow |

## Wiring diagram

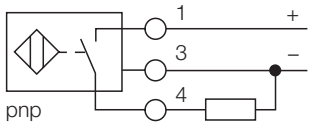


## Functional principle

Inductive sensors are designed for wear-free and non-contact detection of metal objects. Due to a ferrite-less 3-coil system, uprox factor 1 sensors have distinct advantages. They detect all metals at the same switching distance, are magnetic field immune and feature large switching distances.

• Edition: • 08.11.2008

Casp System Sp. Z o.o., Puszkina 2, 43-603 Jaworzno, Polska, www.casp.pl, e-mail: biuro@casp.pl, tel/fax: +48 32 614 09 17

uprox®

# Inductive sensor
# with extended switching distance
# Ni75U-CP80-AP6X2

TURCK
Industrial Automation

| **Mounting instructions** | minimum distances |
|---|---|
| Distance D | 3 x B |
| Distance W | 3 x Sn |
| Distance T | 4 x Sn |
| Distance S | 1,5 x B |
| Distance G | 6 x Sn |
| Distance A | 1 x B |
| Distance C | 1 x B |

| **Width of the active face B** | 80 mm |
|---|---|

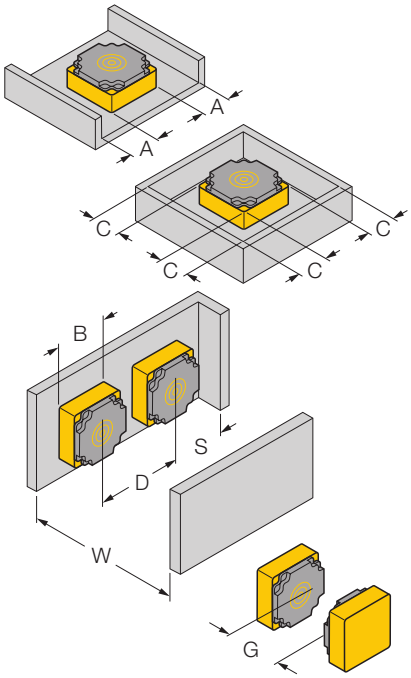


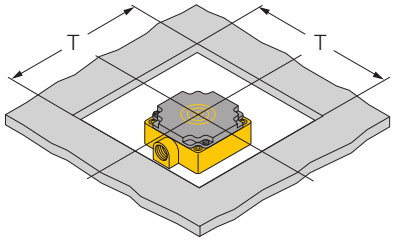


• Edition: • 08.11.2008

uprox®

# Inductive sensor
# with extended switching distance
# Ni75U-CP80-AP6X2

TURCK
Industrial
Automation

• Edition: • 08.11.2008