Inductive sensor
with extended temperature range
Ni40-CP80-VP4X2/S100

TURCK
Industrial Automation

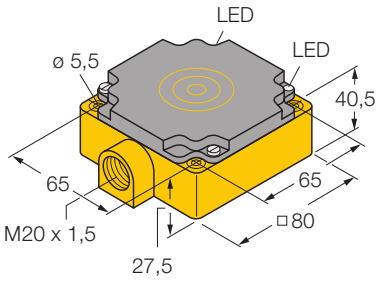

- **rectangular, height 41 mm**
- **Plastic, PBT-GF30-V0**
- **for temperatures up to +100°C**
- **4-wire DC, 10…65 VDC**
- **change-over, pnp output**
- **Terminal chamber**

Wiring diagram

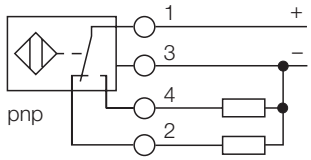

Type	Ni40-CP80-VP4X2/S100
Ident-No.	15095
Rated operating distance Sn	40 mm
Mounting condition	non-flush
Assured sensing range	(0,81 x Sn) mm
Correction factors	St37 = 1, V2A ~ 0.7, Ms ~ 0.4, Al ~ 0.3
Repeatability	2 %
Temperature drift	± 10 %
	± 20 %, ≥ +70 °C
Hysteresis	3… 15 %
Ambient temperature	-25…+ 100 °C
Operating voltage	10… 65VDC
Residual ripple	10 % U_{ss}
DC rated operational current	200 mA
Rated operational current	see derating curve
No-load current I_0	15 mA
Residual current	0.1 mA
Rated insulation voltage	0.5 kV
Short-circuit protection	yes / cyclic
Voltage drop at I_e	1.8V
Wire breakage / Reverse polarity protection	yes / complete
Output function	4-wire, change-over, pnp
Switching frequency	0.1 kHz
Housing	rectangular, CP80
Dimensions	80 x 80 x 41 mm
Housing material	plastic, PBT-GF30-V0
Material active face	plastic, PBT-GF30-V0
Connection	Terminal chamber
Clamping ability	2.5mm^2
Vibration resistance	55 Hz (1 mm)
Shock resistance	30g (11 ms)
Degree of protection	IP67
Operating voltage display	LED green
Display switch state	LED yellow

Functional principle

Inductive sensors are designed for wear-free and non-contact detection of metal objects. For this purpose they use a high-frequency electro-magnetic AC field that interacts with the target. With inductive sensors, this field is generated by an LC resonant circuit with a ferrite core coil. Special inductive sensors versions can be used at temperatures of -60°C up to +250°C.

derating curve

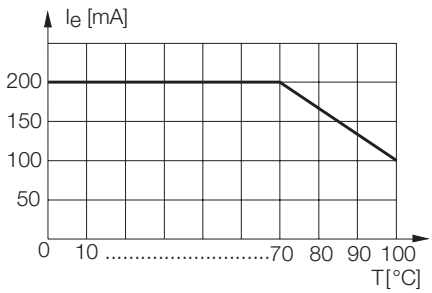

• Edition: • 08.11.2008

Inductive sensor
with extended temperature range
Ni40-CP80-VP4X2/S100

Mounting instructions	minimum distances
Distance D	3 x B
Distance W	3 x Sn
Distance S	1,5 x B
Distance G	6 x Sn
Distance A	1 x B
Distance C	1 x B

Width of the active face B	80 mm

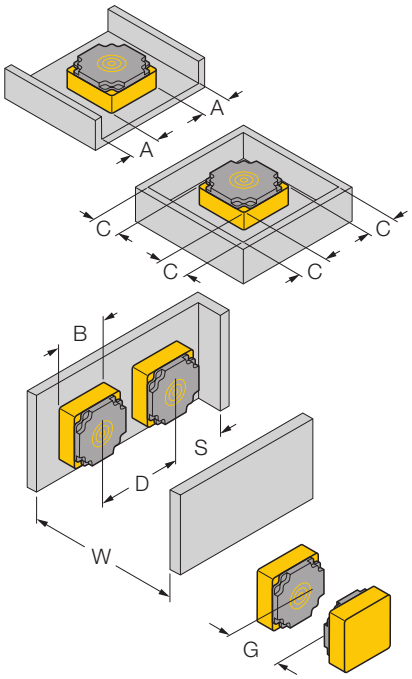

• Edition: • 08.11.2008

Inductive sensor
with extended temperature range
Ni40-CP80-VP4X2/S100

TURCK
Industrial
Automation

• Edition: • 08.11.2008