uprox+

Inductive sensor
Ni70U-Q80-AP6X2-H1141

TURCK
Industrial Automation

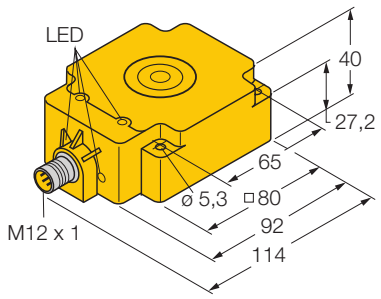

- **rectangular, height 40 mm**
- **top active face**
- **Plastic, PBT-GF30-V0**
- **factor 1 for all metals**
- **extended switching distance**
- **degree of protection IP68**
- **magnetic field immune**
- **predamping protection through self-compensation**
- **1-side embedding possible**
- **3-wire DC, 10…30 VDC**
- **normally open, pnp output**
- **connector, M12 x 1**

Type	Ni70U-Q80-AP6X2-H1141
Ident-No.	1625832
Rated operating distance Sn	70 mm
Mounting condition	non-flush, partial embedding possible
Assured sensing range	(0,81 x Sn) mm
Repeatability	2 %
Temperature drift	± 10 %
Hysteresis	3… 15 %
Ambient temperature	-25…+ 70 °C
Operating voltage	10… 30VDC
Residual ripple	10 % U_{ss}
DC rated operational current	200 mA
No-load current I_0	15 mA
Residual current	0.1 mA
Rated insulation voltage	0.5 kV
Short-circuit protection	yes / cyclic
Voltage drop at I_e	1.8V
Wire breakage / Reverse polarity protection	yes / complete
Output function	3-wire, normally open, pnp
Insulation class	
Switching frequency	0.25 kHz
Housing	rectangular, Q80
Dimensions	92 x 80 x 40 mm
Housing material	plastic, PBT-GF30-V0, yellow
Material active face	plastic, PBT-GF30-V0, yellow
Connection	connectors, M12 x 1
Vibration resistance	55 Hz (1 mm)
Shock resistance	30g (11 ms)
Degree of protection	IP68
Operating voltage display	LED green
Display switch state	LED yellow

Wiring diagram

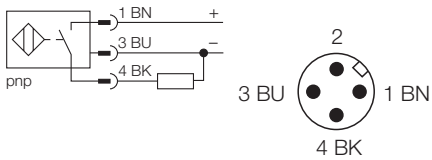

Functional principle

Inductive sensors are designed for wear-free and non-contact detection of metal objects. uprox+ sensors have considerable advantages due to their patented multi-coil system. They excel in highest switching distances, maximum flexibility and operational reliability as well as efficient standardisation.

• Edition: • 08.11.2008

Inductive sensor
Ni70U-Q80-AP6X2-H1141

Industrial Automation

Mounting instructions	minimum distances
Distance D	240 mm
Distance W	210 mm
Distance S	80 mm
Distance G	420 mm
Distance A	70 mm
Distance C	140 mm

Width of the active face B	80 mm

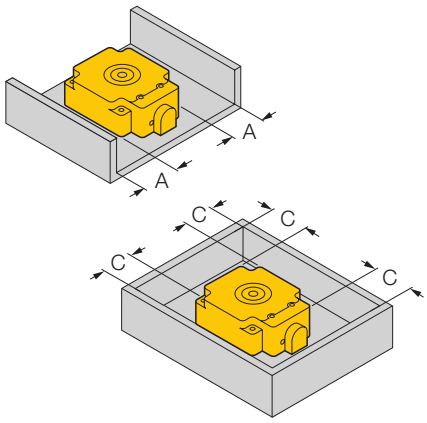

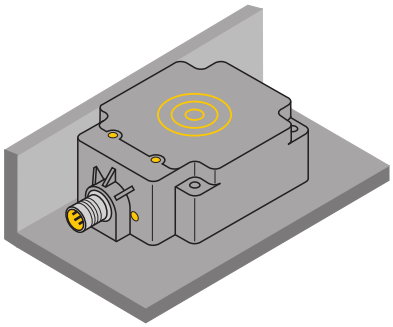

1-side flush mounting:
Sr = 50 mm

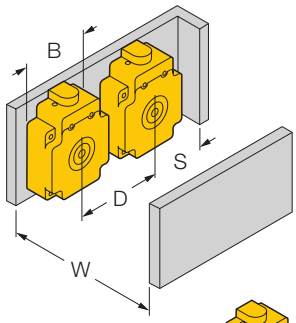

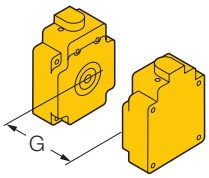

• Edition: • 08.11.2008