uprox®

Inductive sensor
with extended switching distance
Ni40U-CP40-VP4X2

TURCK
Industrial Automation

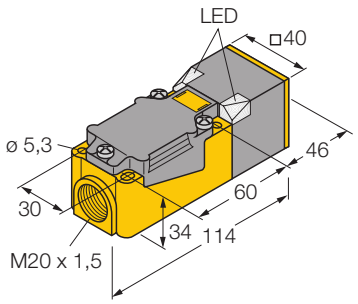

Type	Ni40U-CP40-VP4X2
Ident-No.	1540600
Rated operating distance Sn	40 mm
Mounting condition	non-flush
Assured sensing range	(0,81 x Sn) mm
Repeatability	2 %
Temperature drift	± 10 %
	± 20 %, -25 °C v ≥ +70 °C
Hysteresis	3… 15 %
Ambient temperature	-30…+ 85 °C
Operating voltage	10… 65VDC
Residual ripple	10 % U_{ss}
DC rated operational current	200 mA
No-load current I_0	15 mA
Residual current	0.1 mA
Rated insulation voltage	0.5 kV
Short-circuit protection	yes / cyclic
Voltage drop at I_e	1.8V
Wire breakage / Reverse polarity protection	yes / complete
Output function	4-wire, change-over, pnp
Insulation class	
Switching frequency	0.25 kHz
Housing	rectangular, CP40
Dimensions	114 x 40 x 40 mm
	variable orientation of active face in 9 directions
Housing material	plastic, PBT-GF30-V0, black
Material active face	plastic, PA6-GF30-X, yellow
Connection	Terminal chamber
Clamping ability	2.5mm^2
Vibration resistance	55 Hz (1 mm)
Shock resistance	30g (11 ms)
Degree of protection	IP68
Operating voltage display	2 x LEDs green
Display switch state	2 x LED yellow

- **rectangular, height 40 mm**
- **variable orientation of active face in 9 directions**
- **Plastic, PBT-GF30-V0**
- **Corner LEDs with high luminance level**
- **optimum visibility of operating-voltage display and switching state in any installation position**
- **factor 1 for all metals**
- **extended switching distance**
- **degree of protection IP68**
- **large detection range**
- **magnetic field immune**
- **extended temperature range**
- **high switching frequency**
- **4-wire DC, 10…65 VDC**
- **change-over, pnp output**
- **Terminal chamber**

Wiring diagram

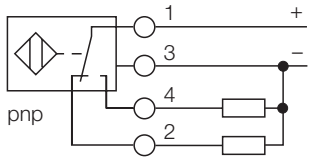

Functional principle

Inductive sensors are designed for wear-free and non-contact detection of metal objects. Due to a ferrite-less 3-coil system, uprox factor 1 sensors have distinct advantages. They detect all metals at the same switching distance, are magnetic field immune and feature large switching distances.

• Edition: • 08.11.2008

Casp System Sp. Z o.o., Puszkina 2, 43-603 Jaworzno, Polska, www.casp.pl, e-mail: biuro@casp.pl, tel/fax: +48 32 614 09 17

uprox®

TURCK
Industrial Automation

Inductive sensor
with extended switching distance
Ni40U-CP40-VP4X2

Mounting instructions	minimum distances
Distance D	240 мм
Distance W	120 мм
Distance S	1,5 x B
Distance G	240 мм
Distance N	30 мм

Width of the active face B	40 mm

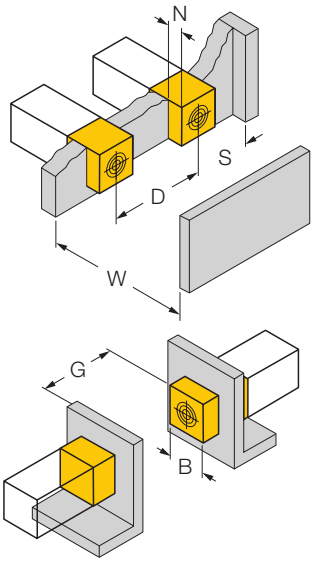

• Edition: • 08.11.2008

Inductive sensor
with extended switching distance
Ni40U-CP40-VP4X2

Industrial Automation

Accessories

Type code	Ident-No.	Short text	Dimension drawing
STRM M20X1,5 SCHWARZ	6965902	cable glands M20 x 1,5	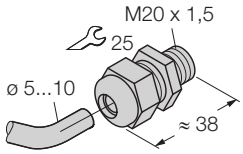
JS 025/037	69429	mounting rail; material: VA 1.4301	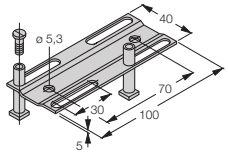
BSS-CP40	6901318	fixing clamp; material: polypropylene	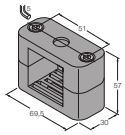

• Edition: • 08.11.2008