Inductive sensor
Ni20-K40SR-AP6X

Industrial Automation

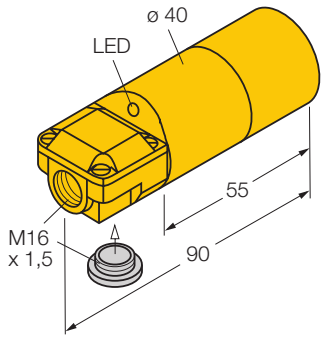

- **2 cable entries (axial, radial)**
- **smooth barrel, 40 mm diameter**
- **plastic, ABS**
- **3-wire DC, 10…30 VDC**
- **normally open, pnp output**
- **Terminal chamber**

Wiring diagram

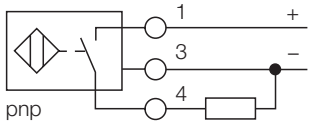

Type	Ni20-K40SR-AP6X
Ident-No.	16026
Rated operating distance Sn	20 mm
Mounting condition	non-flush
Assured sensing range	(0,81 x Sn) mm
Correction factors	St37 = 1, V2A ~ 0.7, Ms ~ 0.4, Al ~ 0.3
Repeatability	2 %
Temperature drift	± 10 %
Hysteresis	3… 15 %
Ambient temperature	-25…+ 70 °C
Operating voltage	10… 30VDC
Residual ripple	10 % U_{ss}
DC rated operational current	200 mA
No-load current I_0	15 mA
Residual current	0.1 mA
Rated insulation voltage	0.5 kV
Short-circuit protection	yes / cyclic
Voltage drop at I_e	1.8V
Wire breakage / Reverse polarity protection	yes / complete
Output function	3-wire, normally open, pnp
Switching frequency	0.1 kHz
Housing	smooth barrel, 40 mm
Dimensions	90 mm
Housing material	plastic, ABS
Material active face	plastic, ABS
Connection	Terminal chamber
Clamping ability	2.5mm^2
Vibration resistance	55 Hz (1 mm)
Shock resistance	30g (11 ms)
Degree of protection	IP67
Display switch state	LED yellow
Included in scope of supply	BS40, cable gland, blanking plug

Functional principle

Inductive sensors are designed for wear-free and non-contact detection of metal objects. For this purpose they use a high-frequency electro-magnetic AC field that interacts with the target. Conserning inductive sensors, this field is generated by an LC resonant circuit with a ferrite core coil.

• Edition: • 08.11.2008

Casp System Sp. Z o.o., Puszkina 2, 43-603 Jaworzno, Polska, www.casp.pl, e-mail: biuro@casp.pl, tel/fax: +48 32 614 09 17

Inductive sensor
Ni20-K40SR-AP6X

Mounting instructions	minimum distances
Distance D	3 x B
Distance W	3 x Sn
Distance T	3 x B
Distance S	1,5 x B
Distance G	6 x Sn
Distance N	2 x Sn

Diameter of the active area B	Ø 40 mm

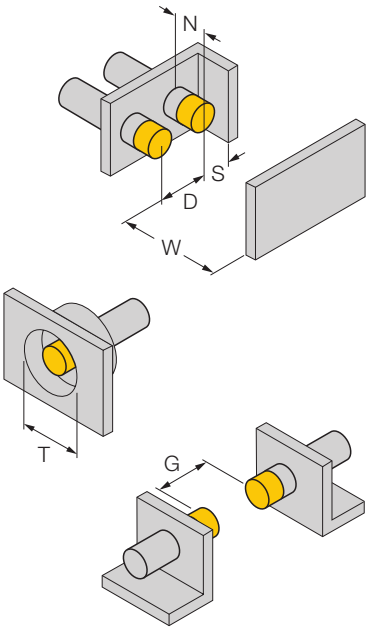

• Edition: • 08.11.2008

Inductive sensor
Ni20-K40SR-AP6X

Industrial
Automation

• Edition: • 08.11.2008