uprox®

# Inductive sensor
# Ni20U-MT30-VN4X-H1141

TURCK
Industrial Automation

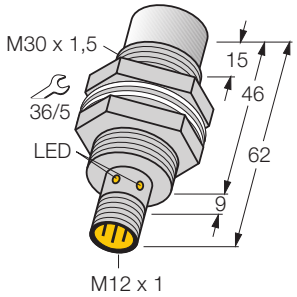


- **threaded barrel, M30 x 1.5**
- **teflon-coated brass**
- **factor 1 for all metals**
- **magnetic field immune**
- **extended temperature range**
- **high switching frequency**
- **4-wire DC, 10…65 VDC**
- **change-over, npn output**
- **connector, M12 x 1**

| | |
|---|---|
| **Type** | Ni20U-MT30-VN4X-H1141 |
| Ident-No. | 1582553 |
| **Rated operating distance Sn** | 20 mm |
| Mounting condition | non-flush |
| Assured sensing range | (0,81 x Sn) mm |
| Repeatability | 2 % |
| Temperature drift | ± 10 % |
| | ± 15 %, -25 °C v ≥ +70 °C |
| Hysteresis | 3… 15 % |
| Ambient temperature | -30…+ 85 °C |
| **Operating voltage** | 10… 65VDC |
| Residual ripple | 10 % $U_{ss}$ |
| DC rated operational current | 200 mA |
| No-load current $I_0$ | 15 mA |
| Residual current | 0.1 mA |
| Rated insulation voltage | 0.5 kV |
| Short-circuit protection | yes / cyclic |
| Voltage drop at $I_e$ | 1.8V |
| Wire breakage / Reverse polarity protection | yes / complete |
| Output function | 4-wire, change-over, npn |
| Insulation class | |
| Switching frequency | 1.5 kHz |
| **Housing** | threaded barrel, M30 x 1.5 |
| Dimensions | 62 mm |
| Housing material | metal, CuZn, teflonised |
| Material active face | plastic, PBT, teflonised |
| Tightening torque of housing nut | 75 Nm |
| Connection | connectors, M12 x 1 |
| Vibration resistance | 55 Hz (1 mm) |
| Shock resistance | 30g (11 ms) |
| Degree of protection | IP67 |
| **Display switch state** | LED yellow |

## Wiring diagram

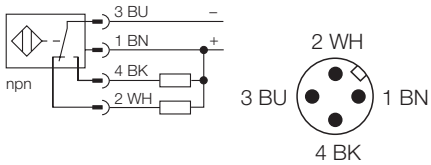


## Functional principle

Inductive sensors are designed for wear-free and non-contact detection of metal objects. Due to a ferrite-less 3-coil system, uprox factor 1 sensors have distinct advantages. They detect all metals at the same switching distance, are magnetic field immune and feature large switching distances.

• Edition: • 08.11.2008

# Inductive sensor
# Ni20U-MT30-VN4X-H1141

| | |
|---|---|
| **Mounting instructions** | minimum distances |
| Distance D | 3 x B |
| Distance W | 3 x Sn |
| Distance T | 3 x B |
| Distance S | 1,5 x B |
| Distance G | 6 x Sn |
| Distance N | 2 x Sn |
| **Diameter of the active area B** | Ø 30 mm |

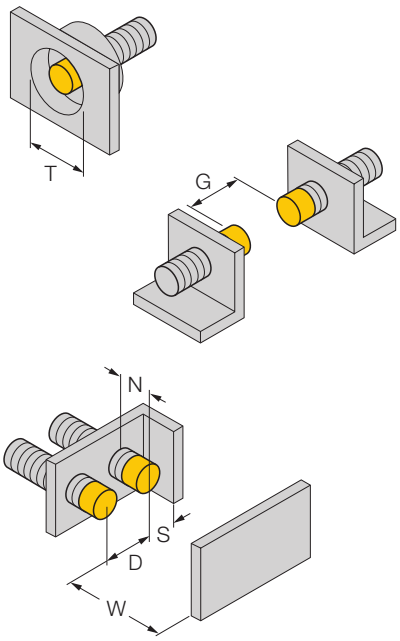


• Edition: • 08.11.2008

## Accessories

| Type code | Ident-No. | Short text | Dimension drawing |
|---|---|---|---|
| QMT-30 | 6945105 | quick-mount fixing clamp with dead-stop; material: teflon-coated brass male thread M36 x 1.5. Note: The switching distance of proximity switches can be reduced by the use of quick mounting brackets. | 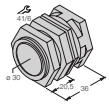 |
| BST-30B | 6947216 | fixing clamp with dead-stop; material: PA6 | 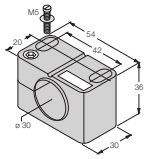 |
| BSS-30 | 6901319 | fixing clamp; material: polypropylene | 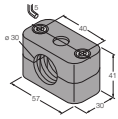 |



Casp System Sp. Z o.o., Puszkina 2, 43-603 Jaworzno, Polska, www.casp.pl, e-mail: biuro@casp.pl, tel/fax: +48 32 614 09 17