uprox®

Inductive sensor rotational speed monitor DBi15U-K40SR-AP4X2

TURCK
Industrial Automation

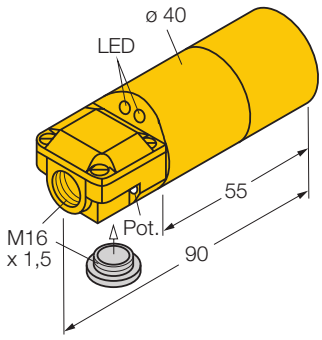

- **2 cable entries (axial, radial)**
- **smooth barrel, 40 mm diameter**
- **plastic, ABS**
- **large monitoring range of 60 to 3000 1/min**
- **fixed start-up time delay of 5 s**
- **switch point adjustable via potentiometer**
- **factor 1 for all metals**
- **magnetic field immune**
- **3-wire DC, 10…65 VDC**
- **normally open, pnp output**
- **Terminal chamber**

Type	DBi15U-K40SR-AP4X2
Ident-No.	1500201
Rotational speed range, adjustable	1… 50 Hz
Hysteresis (rotational speed range)	3… 15 %
Rated operating distance Sn	15 mm
Mounting condition	flush
Assured sensing range	(0,81 x Sn) mm
Repeatability	2 %
Temperature drift	± 10 %
	± 15 %, -25 °C v ≥ +70 °C
Hysteresis	3… 15 %
Ambient temperature	-30…+ 85 °C
Operating voltage	10… 65VDC
Residual ripple	10 % U_{ss}
DC rated operational current	200 mA
No-load current I_0	20 mA
Residual current	0.1 mA
Rated insulation voltage	0.5 kV
Short-circuit protection	yes / cyclic
Voltage drop at I_e	1.8V
Wire breakage / Reverse polarity protection	yes / complete
Output function	3-wire, normally open, pnp
Insulation class	
Housing	smooth barrel, 40 mm
Dimensions	90 mm
Housing material	plastic, ABS
Material active face	plastic, ABS
Connection	Terminal chamber
Clamping ability	2.5mm^2
Vibration resistance	55 Hz (1 mm)
Shock resistance	30g (11 ms)
Degree of protection	IP67
Operating voltage display	LED green
Display switch state	LED yellow
Included in scope of supply	BS40, cable gland, blanking plug

Wiring diagram

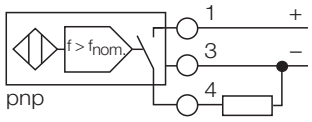

Functional principle

The rotational speed is detected by periodic damping of the integrated inductive sensor. This can be accomplished via metal targets or teeth of the monitored shaft. The pulse sequence generated is compared to an adjustable reference value in a comparator circuit If the rotational speed is below the reference value, the output is open (0). If the reference value is exceeded, the output closes (1). The start-up time delay (AÜ) is triggered by applying voltage to the device and closes the output for 5 s (start-up time of the drive).

Diagram

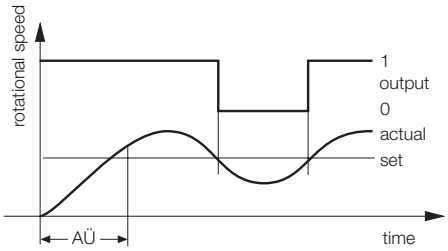

• Edition: • 08.11.2008

Inductive sensor
rotational speed monitor
DBi15U-K40SR-AP4X2

Mounting instructions	minimum distances
Distance D	2 x B
Distance W	3 x Sn
Distance T	3 x B
Distance S	1,5 x B
Distance G	6 x Sn
Diameter of the active area B	Ø 40 mm

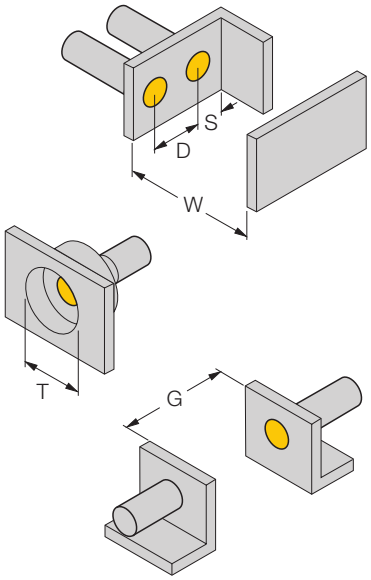

• Edition: • 08.11.2008

uprox®

Inductive sensor rotational speed monitor DBi15U-K40SR-AP4X2

TURCK
Industrial Automation

• Edition: • 08.11.2008