uprox®

Inductive sensor
Ni12U-K20SK-AN6X

TURCK
Industrial Automation

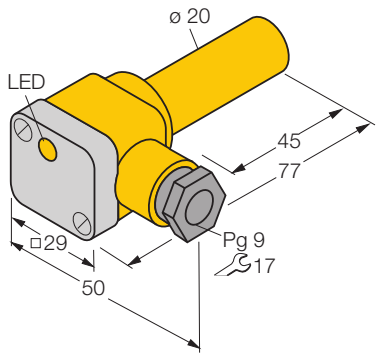

- **smooth barrel, 20mm diameter**
- **Plastic, PBT-GF30-V0**
- **factor 1 for all metals**
- **degree of protection IP68**
- **magnetic field immune**
- **extended temperature range**
- **high switching frequency**
- **predamping protection through self-compensation**
- **3-wire DC, 10…30 VDC**
- **normally open npn output**
- **Terminal chamber**

Type	Ni12U-K20SK-AN6X
Ident-No.	1645331
Rated operating distance Sn	12 mm
Mounting condition	non-flush, partial embedding possible
Assured sensing range	(0,81 x Sn) mm
Repeatability	2 %
Temperature drift	± 10 %
	± 20 %, -25 °C v ≥ +70 °C
Hysteresis	3… 15 %
Ambient temperature	-30…+ 85 °C
Operating voltage	10… 30VDC
Residual ripple	10 % U_{ss}
DC rated operational current	200 mA
No-load current I_0	15 mA
Residual current	0.1 mA
Rated insulation voltage	0.5 kV
Short-circuit protection	yes / cyclic
Voltage drop at I_e	1.8V
Wire breakage / Reverse polarity protection	yes / complete
Output function	3-wire, normally open, npn
Insulation class	
Switching frequency	1 kHz
Housing	smooth barrel, 20 mm
Dimensions	77 mm
Housing material	plastic, PBT-GF30-V0
Terminal chamber cover material	plastic, Ultem
Terminal chamber housing material	plastic, plastic, PA12-GF20
Material active face	plastic, PBT
Connection	Terminal chamber
Clamping ability	2.5mm^2
Cable external diameter	4.5… 8 mm
Vibration resistance	55 Hz (1 mm)
Shock resistance	30g (11 ms)
Degree of protection	IP68
Display switch state	LED yellow
Included in scope of supply	BS20; cable gland; 2x plastic seals

Wiring diagram

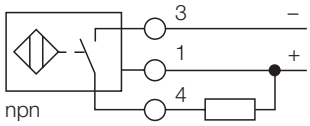

Functional principle

Inductive sensors are designed for wear-free and non-contact detection of metal objects. Due to a ferrite-less 3-coil system, uprox factor 1 sensors have distinct advantages. They detect all metals at the same switching distance, are magnetic field immune and feature large switching distances.

• Edition: • 08.11.2008

Inductive sensor
Ni12U-K20SK-AN6X

Mounting instructions	minimum distances
Distance W	3 x Sn
Distance T	3 x B
Distance S	0,5 x B
Distance G	6 x Sn
Distance N	2 x Sn
Diameter of the active area B	Ø 20 mm

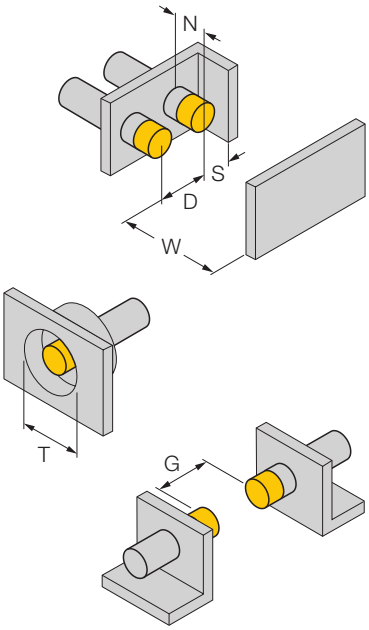

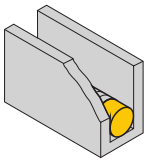

up to 3-side flush mounting possible
1-side flush mounting: Sr = 10 mm
2-side flush mounting: Sr = 9 mm
3-side flush mounting: Sr = 9 mm

• Edition: • 08.11.2008

Accessories

Type code	Ident-No.	Short text	Dimension drawing
BS20	69464	fixing clamp; material mounting block: PBT	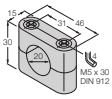

Casp System Sp. Z o.o., Puszkina 2, 43-603 Jaworzno, Polska, www.casp.pl, e-mail: biuro@casp.pl, tel/fax: +48 32 614 09 17