uprox®

Inductive sensor
Ni12U-M18M-VP4X

TURCK
Industrial Automation

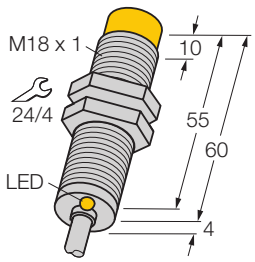

- **Threaded barrel, M18 x 1**
- **Chrome-plated brass**
- **factor 1 for all metals**
- **magnetic field immune**
- **extended temperature range**
- **high switching frequency**
- **DC 4-wire, 10…65 VDC**
- **Change-over contact, PNP output**
- **Cable connection**

Wiring diagram

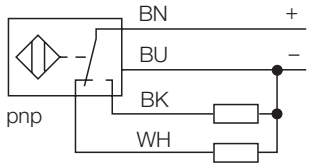

Functional principle

Inductive sensors are designed for wear-free and non-contact detection of metal objects. Due to a ferrite-less 3-coil system, uprox factor 1 sensors have distinct advantages. They detect all metals at the same switching distance, are magnetic field immune and feature large switching distances.

Type	Ni12U-M18M-VP4X
Ident-No.	1581403
Rated operating distance Sn	12 mm
Mounting condition	non-flush
Assured sensing range	(0,81 x Sn) mm
Repeatability	2 %
Temperature drift	± 10 %
	± 15 %, -25 °C v ≥ +70 °C
Hysteresis	3… 15 %
Ambient temperature	-30…+ 85 °C
Operating voltage	10… 65VDC
Residual ripple	10 % U_{ss}
DC rated operational current	200 mA
No-load current I_0	15 mA
Residual current	0.1 mA
Rated insulation voltage	0.5 kV
Short-circuit protection	yes / cyclic
Voltage drop at I_e	1.8V
Wire breakage / Reverse polarity protection	yes / complete
Output function	4-wire, change-over, pnp
Insulation class	
Switching frequency	2 kHz
Housing	threaded barrel, M18 x 1
Dimensions	64 mm
Housing material	metal, CuZn, chrome-plated
Material active face	plastic, PBT
End cap	plastic, EPTR
Tightening torque of housing nut	25 Nm
Connection	cable
Cable quality	Ø 5.2, LifYY, PVC, 2 m
Cable cross section:	4 x 0.34mm^2
Vibration resistance	55 Hz (1 mm)
Shock resistance	30g (11 ms)
Degree of protection	IP67
Display switch state	LED yellow

• Edition: • 08.11.2008

Casp System Sp. Z o.o., Puszkina 2, 43-603 Jaworzno, Polska, www.casp.pl, e-mail: biuro@casp.pl, tel/fax: +48 32 614 09 17

Inductive sensor
Ni12U-M18M-VP4X

Mounting instructions	minimum distances
Distance D	3 x B
Distance W	3 x Sn
Distance T	65 мм
Distance S	1,5 x B
Distance G	6 x Sn
Distance N	2 x Sn
Diameter of the active area B	Ø 18 mm

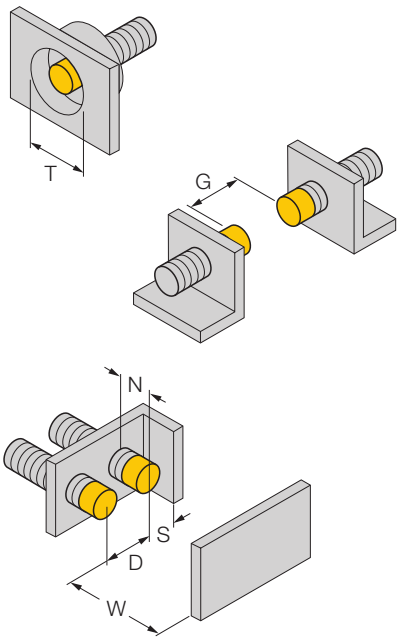

• Edition: • 08.11.2008

Accessories

Type code	Ident-No.	Short text	Dimension drawing
MW-18	6945004	mounting bracket; material: stainless steel A2 1.4301 (AISI 304)	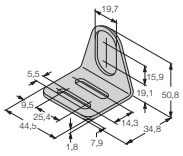
BSS-18	6901320	fixing clamp; material: polypropylene	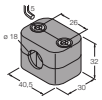

Casp System Sp. Z o.o., Puszkina 2, 43-603 Jaworzno, Polska, www.casp.pl, e-mail: biuro@casp.pl, tel/fax: +48 32 614 09 17