uprox®

Inductive sensor
Ni12U-G18-ADZ30X2-B1331

TURCK
Industrial Automation

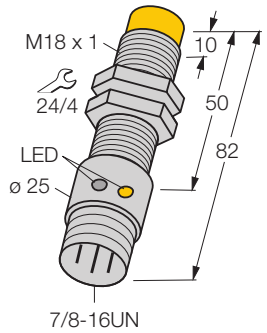

- **Threaded barrel, M18 x 1**
- **Chrome-plated brass**
- **factor 1 for all metals**
- **magnetic field immune**
- **extended temperature range**
- **high switching frequency**
- **AC 2-wire, 20…250 VAC**
- **2-wire DC, 10…300 VDC**
- **normally open**
- **connector, 7/8"**

Type	Ni12U-G18-ADZ30X2-B1331
Ident-No.	4281412
Rated operating distance Sn	12 mm
Mounting condition	non-flush
Assured sensing range	(0,81 x Sn) mm
Repeatability	2 %
Temperature drift	± 10 %
	± 15 %, -25 °C v ≥ +70 °C
Hysteresis	3… 15 %
Ambient temperature	-30…+ 85 °C
Operating voltage	20… 250VAC
Operating voltage	10… 300VDC
AC rated operational current	400 mA
DC rated operational current	300 mA
Frequency	50… 60 Hz
Residual current	1.7 mA
Rated insulation voltage	1.5 kV
Surge current	3 A (20 ms max. 5 Hz)
Short-circuit protection	yes / latching
Voltage drop at I_e	6V
Wire breakage / Reverse polarity protection	yes / complete
Output function	2-wire, normally open
Smallest operating current I_m	≥ 3 mA
Insulation class	
Switching frequency	0.02 kHz
Housing	threaded barrel, M18 x 1
Dimensions	82 mm
Housing material	metal, CuZn, chrome-plated
Material active face	plastic, PBT
Tightening torque of housing nut	25 Nm
Connection	connectors, 7/8''
Vibration resistance	55 Hz (1 mm)
Shock resistance	30g (11 ms)
Degree of protection	IP67
Operating voltage display	LED green
Display switch state	LED yellow

Wiring diagram

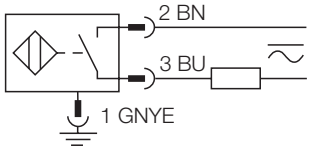

Functional principle

Inductive sensors are designed for wear-free and non-contact detection of metal objects. Due to a ferrite-less 3-coil system, uprox factor 1 sensors have distinct advantages. They detect all metals at the same switching distance, are magnetic field immune and feature large switching distances.

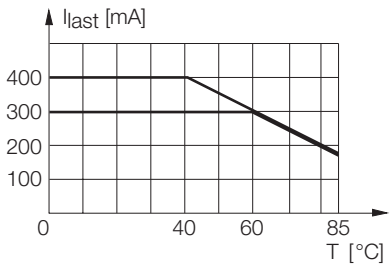

• Edition: • 08.11.2008

uprox®

Inductive sensor
Ni12U-G18-ADZ30X2-B1331

TURCK
Industrial Automation

Mounting instructions	minimum distances
Distance D	3 x B
Distance W	3 x Sn
Distance T	3 x B
Distance S	1,5 x B
Distance G	6 x Sn
Distance N	2 x Sn

Diameter of the active area B	Ø 18 mm

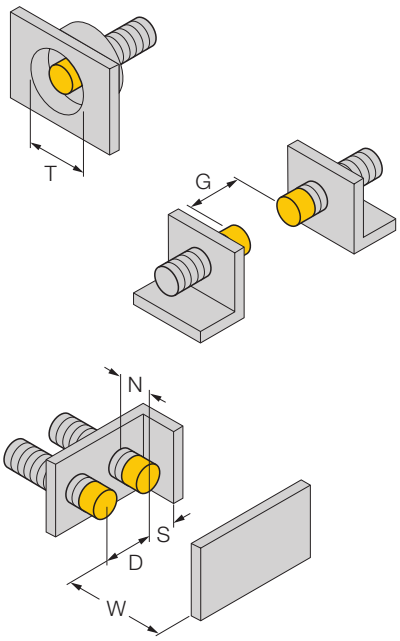

• Edition: • 08.11.2008

Accessories

Type code	Ident-No.	Short text	Dimension drawing
MW-18	6945004	mounting bracket; material: stainless steel A2 1.4301 (AISI 304)	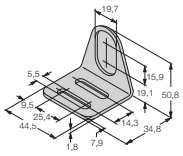
BSS-18	6901320	fixing clamp; material: polypropylene	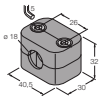

Casp System Sp. Z o.o., Puszkina 2, 43-603 Jaworzno, Polska, www.casp.pl, e-mail: biuro@casp.pl, tel/fax: +48 32 614 09 17