uprox®

# Inductive sensor
# Bi15U-CP40-VP4X2

TURCK
Industrial Automation

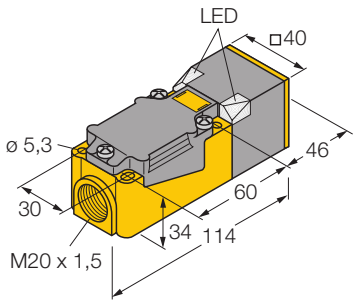


- **rectangular, height 40 mm**
- **variable orientation of active face in 9 directions**
- **Plastic, PBT-GF30-V0**
- **Corner LEDs with high luminance level**
- **optimum visibility of operating-voltage display and switching state in any installation position**
- **factor 1 for all metals**
- **degree of protection IP68**
- **magnetic field immune**
- **extended temperature range**
- **high switching frequency**
- **4-wire DC, 10…65 VDC**
- **change-over, pnp output**
- **Terminal chamber**

| | |
|---|---|
| **Type** | Bi15U-CP40-VP4X2 |
| Ident-No. | 1540500 |
| **Rated operating distance Sn** | 15 mm |
| Mounting condition | flush |
| Assured sensing range | (0,81 x Sn) mm |
| Repeatability | 2 % |
| Temperature drift | ± 10 % |
| | ± 15 %, -25 °C v ≥ +70 °C |
| Hysteresis | 3… 15 % |
| Ambient temperature | -30…+ 85 °C |
| **Operating voltage** | 10… 65VDC |
| Residual ripple | 10 % $U_{ss}$ |
| DC rated operational current | 200 mA |
| No-load current $I_0$ | 15 mA |
| Residual current | 0.1 mA |
| Rated insulation voltage | 0.5 kV |
| Short-circuit protection | yes / cyclic |
| Voltage drop at $I_e$ | 1.8V |
| Wire breakage / Reverse polarity protection | yes / complete |
| Output function | 4-wire, change-over, pnp |
| Insulation class | |
| Switching frequency | 0.25 kHz |
| **Housing** | rectangular, CP40 |
| Dimensions | 114 x 40 x 40 mm |
| | variable orientation of active face in 9 directions |
| Housing material | plastic, PBT-GF30-V0, black |
| Material active face | plastic, PA6-GF30-X, yellow |
| Connection | Terminal chamber |
| Clamping ability | 2.5mm$^2$ |
| Vibration resistance | 55 Hz (1 mm) |
| Shock resistance | 30g (11 ms) |
| Degree of protection | IP68 |
| **Operating voltage display** | 2 x LEDs green |
| Display switch state | 2 x LED yellow |

## Wiring diagram

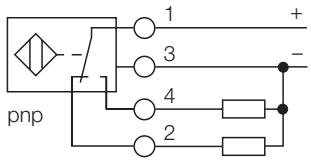


## Functional principle

Inductive sensors are designed for wear-free and non-contact detection of metal objects. Due to a ferrite-less 3-coil system, uprox factor 1 sensors have distinct advantages. They detect all metals at the same switching distance, are magnetic field immune and feature large switching distances.

• Edition: • 08.11.2008

Casp System Sp. Z o.o., Puszkina 2, 43-603 Jaworzno, Polska, www.casp.pl, e-mail: biuro@casp.pl, tel/fax: +48 32 614 09 17

# Inductive sensor
# Bi15U-CP40-VP4X2

| | |
|---|---|
| **Mounting instructions** | minimum distances |
| Distance D | 80 мм |
| Distance W | 45 мм |
| Distance S | 40 мм |
| Distance G | 90 мм |
| **Width of the active face B** | 40 mm |

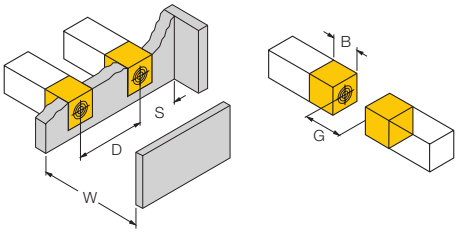


• Edition: • 08.11.2008

## Accessories

| Type code | Ident-No. | Short text | Dimension drawing |
|---|---|---|---|
| STRM M20X1,5 SCHWARZ | 6965902 | cable glands M20 x 1,5 | 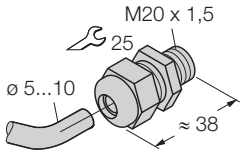  |
| JS 025/037 | 69429 | mounting rail; material: VA 1.4301 | 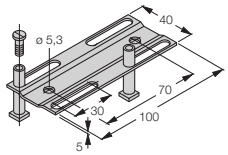  |
| BSS-CP40 | 6901318 | fixing clamp; material: polypropylene | 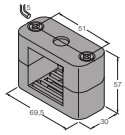 |



Casp System Sp. Z o.o., Puszkina 2, 43-603 Jaworzno, Polska, www.casp.pl, e-mail: biuro@casp.pl, tel/fax: +48 32 614 09 17