Inductive sensor
Ni10-K20SK-AZ3X

TURCK
Industrial Automation

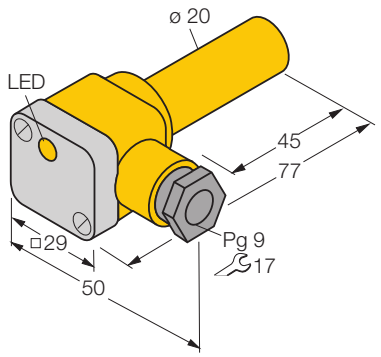

- **smooth barrel, 20mm diameter**
- **Plastic, PBT-GF30-V0**
- **AC 2-wire, 20…250 VAC**
- **2-wire DC, 10…300 VDC**
- **normally open**
- **Terminal chamber**

Wiring diagram

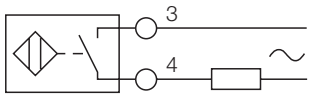

Functional principle

Inductive sensors are designed for wear-free and non-contact detection of metal objects. For this purpose they use a high-frequency electro-magnetic AC field that interacts with the target. Conserning inductive sensors, this field is generated by an LC resonant circuit with a ferrite core coil.

Type	Ni10-K20SK-AZ3X
Ident-No.	43591
Rated operating distance Sn	10 mm
Mounting condition	non-flush
Assured sensing range	(0,81 x Sn) mm
Correction factors	St37 = 1, V2A ~ 0.7, Ms ~ 0.4, Al ~ 0.3
Repeatability	2 %
Temperature drift	± 10 %
Hysteresis	3… 15 %
Ambient temperature	-25…+ 70 °C
Operating voltage	20… 250VAC
Operating voltage	10… 300VDC
AC rated operational current	400 mA
DC rated operational current	300 mA
Frequency	50… 60 Hz
Residual current	1.7 mA
Rated insulation voltage	1.5 kV
Surge current	8 A (10 ms max. 5 Hz)
Voltage drop at I_e	6V
Output function	2-wire, normally open
Smallest operating current I_m	≥ 3 mA
Switching frequency	0.02 kHz
Housing	smooth barrel, 20 mm
Dimensions	77 mm
Housing material	plastic, PBT-GF30-V0
Terminal chamber cover material	plastic, Ultem
Terminal chamber housing material	plastic, plastic, PA12-GF20
Material active face	plastic, PBT-GF30-V0
Connection	Terminal chamber
Clamping ability	2.5mm^2
Cable external diameter	4.5… 8 mm
Vibration resistance	55 Hz (1 mm)
Shock resistance	30g (11 ms)
Degree of protection	IP67
Display switch state	LED yellow
Included in scope of supply	BS20; cable gland; 2x plastic seals

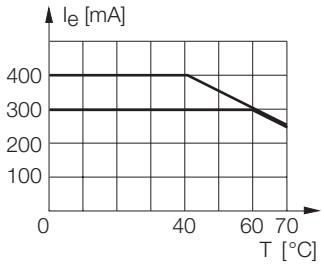

• Edition: • 08.11.2008

Casp System Sp. Z o.o., Puszkina 2, 43-603 Jaworzno, Polska, www.casp.pl, e-mail: biuro@casp.pl, tel/fax: +48 32 614 09 17

Inductive sensor
Ni10-K20SK-AZ3X

Mounting instructions	minimum distances
Distance W	3 x Sn
Distance T	3 x B
Distance S	1,5 x B
Distance G	6 x Sn
Distance N	2 x Sn

Diameter of the active area B	Ø 20 mm

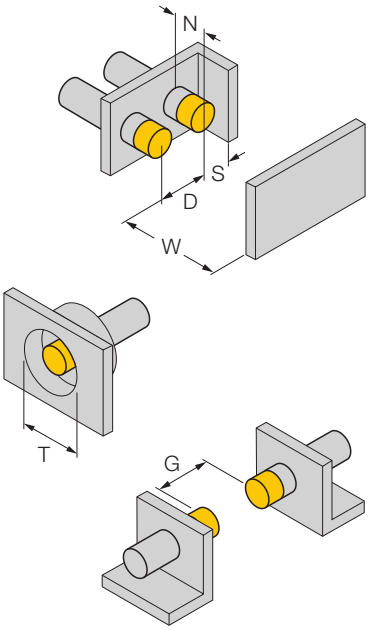

• Edition: • 08.11.2008

Inductive sensor
Ni10-K20SK-AZ3X

Industrial Automation

Accessories

Type code	Ident-No.	Short text	Dimension drawing
BS20	69464	fixing clamp; material mounting block: PBT	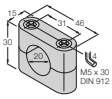

• Edition: • 08.11.2008