# Inductive sensor
# Ni10-K20-AP6X

Industrial Automation

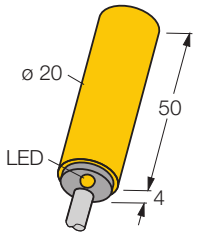


- **smooth barrel, 20mm diameter**
- **Plastic, PBT-GF30-V0**
- **3-wire DC, 10…30 VDC**
- **normally open, pnp output**
- **cable connection**

### Wiring diagram

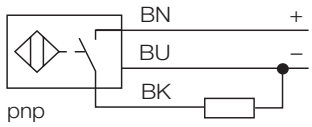


| | |
|---|---|
| **Type** | Ni10-K20-AP6X |
| Ident-No. | 46640 |
| **Rated operating distance Sn** | 10 mm |
| Mounting condition | non-flush |
| Assured sensing range | (0,81 x Sn) mm |
| Correction factors | St37 = 1, V2A ~ 0.7, Ms ~ 0.4, Al ~ 0.3 |
| Repeatability | 2 % |
| Temperature drift | ± 10 % |
| Hysteresis | 3… 15 % |
| Ambient temperature | -25…+ 70 °C |
| **Operating voltage** | 10… 30VDC |
| Residual ripple | 10 % $U_{ss}$ |
| DC rated operational current | 200 mA |
| No-load current $I_0$ | 15 mA |
| Residual current | 0.1 mA |
| Rated insulation voltage | 0.5 kV |
| Short-circuit protection | yes / cyclic |
| Voltage drop at $I_e$ | 1.8V |
| Wire breakage / Reverse polarity protection | yes / complete |
| Output function | 3-wire, normally open, pnp |
| Switching frequency | 1 kHz |
| **Housing** | smooth barrel, 20 mm |
| Dimensions | 54 mm |
| Housing material | plastic, PBT-GF30-V0 |
| Material active face | plastic, PBT-GF30-V0 |
| Connection | cable |
| Cable quality | Ø 5.2, LifYY, PVC, 2 m |
| Cable cross section: | 3 x 0.34mm$^2$ |
| Vibration resistance | 55 Hz (1 mm) |
| Shock resistance | 30g (11 ms) |
| Degree of protection | IP67 |
| **Display switch state** | LED yellow |
| Included in scope of supply | BS20 |

### Functional principle

Inductive sensors are designed for wear-free and non-contact detection of metal objects. For this purpose they use a high-frequency electro-magnetic AC field that interacts with the target. Conserning inductive sensors, this field is generated by an LC resonant circuit with a ferrite core coil.

• Edition: • 08.11.2008

Casp System Sp. Z o.o., Puszkina 2, 43-603 Jaworzno, Polska, www.casp.pl, e-mail: biuro@casp.pl, tel/fax: +48 32 614 09 17

# Inductive sensor
# Ni10-K20-AP6X

| | |
|---|---|
| **Mounting instructions** | minimum distances |
| Distance W | 3 x Sn |
| Distance T | 3 x B |
| Distance S | 1,5 x B |
| Distance G | 6 x Sn |
| Distance N | 2 x Sn |
| **Diameter of the active area B** | Ø 20 mm |

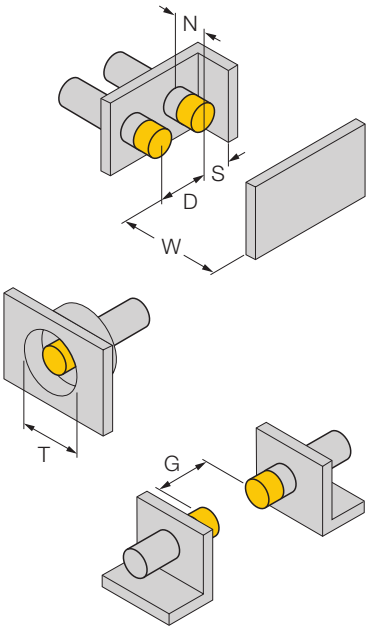


• Edition: • 08.11.2008

# Inductive sensor
# Ni10-K20-AP6X

Industrial Automation

## Accessories

| Type code | Ident-No. | Short text | Dimension drawing |
|---|---|---|---|
| BS20 | 69464 | fixing clamp; material mounting block: PBT | 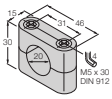  |

• Edition: • 08.11.2008