# Inductive sensor
# Bi10-P30SR-VN4X2

Industrial Automation

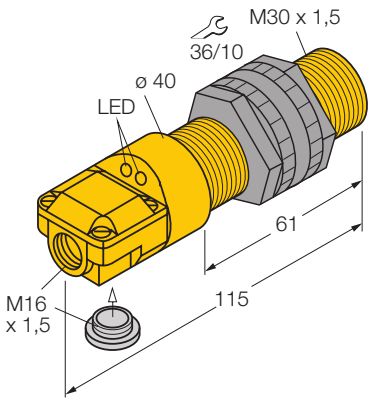


- **2 cable entries (axial, radial)**
- **threaded barrel, M30 x 1.5**
- **plastic, ABS**
- **4-wire DC, 10…65 VDC**
- **change-over, npn output**
- **Terminal chamber**

### Wiring diagram

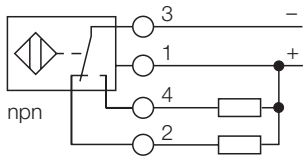


| | |
|---|---|
| **Type** | Bi10-P30SR-VN4X2 |
| Ident-No. | 15752 |
| **Rated operating distance Sn** | 10 mm |
| Mounting condition | flush |
| Assured sensing range | (0,81 x Sn) mm |
| Correction factors | St37 = 1, V2A ~ 0.7, Ms ~ 0.4, Al ~ 0.3 |
| Repeatability | 2 % |
| Temperature drift | ± 10 % |
| Hysteresis | 3… 15 % |
| Ambient temperature | -25…+ 70 °C |
| **Operating voltage** | 10… 65VDC |
| Residual ripple | 10 % $U_{ss}$ |
| DC rated operational current | 200 mA |
| No-load current $I_0$ | 15 mA |
| Residual current | 0.1 mA |
| Rated insulation voltage | 0.5 kV |
| Short-circuit protection | yes / cyclic |
| Voltage drop at $I_e$ | 1.8V |
| Wire breakage / Reverse polarity protection | yes / complete |
| Output function | 4-wire, change-over, npn |
| Switching frequency | 0.5 kHz |
| **Housing** | threaded barrel, M30 x 1.5 |
| Dimensions | 115 mm |
| Housing material | plastic, ABS |
| Material active face | plastic, ABS |
| Tightening torque of housing nut | 5 Nm |
| Connection | Terminal chamber |
| Clamping ability | 2.5mm$^2$ |
| Vibration resistance | 55 Hz (1 mm) |
| Shock resistance | 30g (11 ms) |
| Degree of protection | IP67 |
| **Operating voltage display** | LED green |
| Display switch state | LED yellow |
| Included in scope of supply | cable gland, blanking plug |

### Functional principle

Inductive sensors are designed for wear-free and non-contact detection of metal objects. For this purpose they use a high-frequency electro-magnetic AC field that interacts with the target. Conserning inductive sensors, this field is generated by an LC resonant circuit with a ferrite core coil.

• Edition: • 08.11.2008

Casp System Sp. Z o.o., Puszkina 2, 43-603 Jaworzno, Polska, www.casp.pl, e-mail: biuro@casp.pl, tel/fax: +48 32 614 09 17

# Inductive sensor
# Bi10-P30SR-VN4X2

| **Mounting instructions** | minimum distances |
|---|---|
| Distance D | 2 x B |
| Distance W | 3 x Sn |
| Distance T | 3 x B |
| Distance S | 1,5 x B |
| Distance G | 6 x Sn |

| **Diameter of the active area B** | Ø 30 mm |
|---|---|

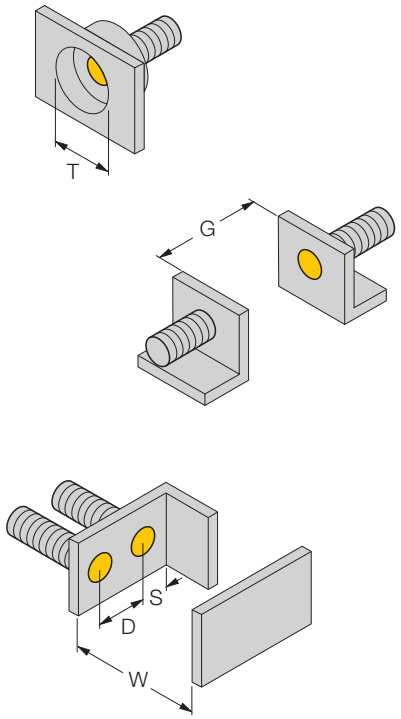


• Edition: • 08.11.2008

# Inductive sensor
# Bi10-P30SR-VN4X2

Industrial Automation

## Accessories

| Type code | Ident-No. | Short text | Dimension drawing |
|---|---|---|---|
| QM-30 | 6945103 | quick-mount fixing clamp with dead-stop; material: chrome-plated brass male thread M36 x 1.5. Note: The switching distance of proximity switches can be reduced by the use of quick mounting brackets. | 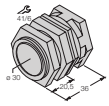 |
| BST-30B | 6947216 | fixing clamp with dead-stop; material: PA6 | 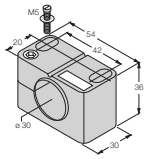 |
| MW-30 | 6945005 | mounting bracket; material: stainless steel A2 1.4301 (AISI 304) | 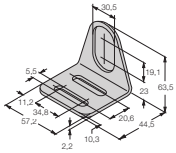 |
| BSS-30 | 6901319 | fixing clamp; material: polypropylene | 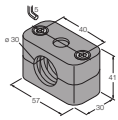 |

• Edition: • 08.11.2008