uprox®

Inductive sensor
Bi10U-EG30SK-VP4X

TURCK
Industrial Automation

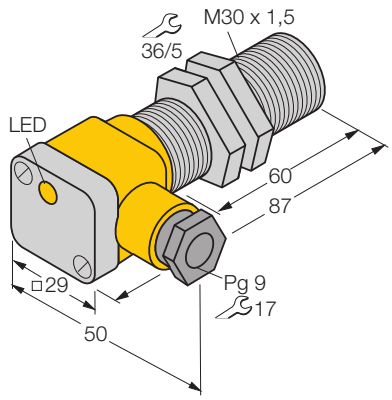

- **threaded barrel, M30 x 1.5**
- **stainless steel, 1.4301**
- **factor 1 for all metals**
- **degree of protection IP68**
- **magnetic field immune**
- **extended temperature range**
- **high switching frequency**
- **4-wire DC, 10…65 VDC**
- **change-over, pnp output**
- **Terminal chamber**

Type	Bi10U-EG30SK-VP4X
Ident-No.	1582601
Rated operating distance Sn	10 mm
Mounting condition	flush
Assured sensing range	(0,81 x Sn) mm
Repeatability	2 %
Temperature drift	± 10 %
	± 15 %, -25 °C v ≥ +70 °C
Hysteresis	3… 15 %
Ambient temperature	-30…+ 85 °C
Operating voltage	10… 65VDC
Residual ripple	10 % U_{ss}
DC rated operational current	200 mA
No-load current I_0	15 mA
Residual current	0.1 mA
Rated insulation voltage	0.5 kV
Short-circuit protection	yes / cyclic
Voltage drop at I_e	1.8V
Wire breakage / Reverse polarity protection	yes / complete
Output function	4-wire, change-over, pnp
Insulation class	
Switching frequency	2 kHz
Housing	threaded barrel, M30 x 1.5
Dimensions	87 mm
Housing material	metal, AISI 304
Terminal chamber cover material	plastic, Ultem
Terminal chamber housing material	plastic, plastic, PA12-GF20
Material active face	plastic, PBT
Tightening torque of housing nut	75 Nm
Connection	Terminal chamber
Clamping ability	1.5mm^2
Cable external diameter	4.5… 8 mm
Vibration resistance	55 Hz (1 mm)
Shock resistance	30g (11 ms)
Degree of protection	IP68
Display switch state	LED yellow
Included in scope of supply	cable gland; 2x plastic seals

Wiring diagram

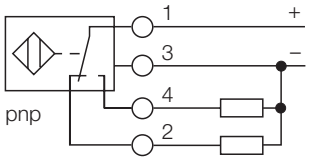

Functional principle

Inductive sensors are designed for wear-free and non-contact detection of metal objects. Due to a ferrite-less 3-coil system, uprox factor 1 sensors have distinct advantages. They detect all metals at the same switching distance, are magnetic field immune and feature large switching distances.

• Edition: • 08.11.2008

Inductive sensor
Bi10U-EG30SK-VP4X

Mounting instructions	minimum distances
Distance D	2 x B
Distance W	3 x Sn
Distance T	3 x B
Distance S	1,5 x B
Distance G	6 x Sn
Diameter of the active area B	Ø 30 mm

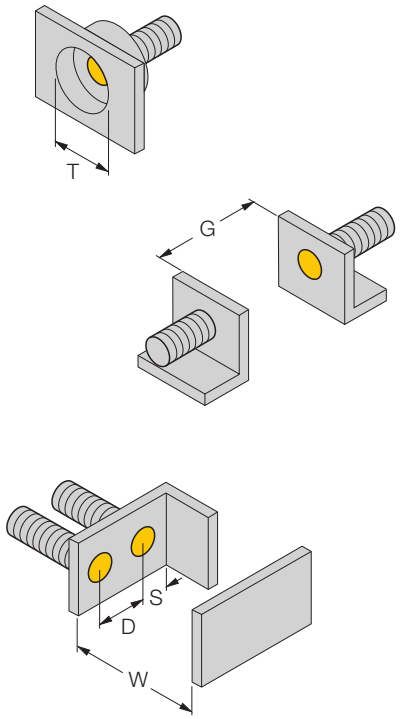

• Edition: • 08.11.2008

Accessories

Type code	Ident-No.	Short text	Dimension drawing
QM-30	6945103	quick-mount fixing clamp with dead-stop; material: chrome-plated brass male thread M36 x 1.5. Note: The switching distance of proximity switches can be reduced by the use of quick mounting brackets.	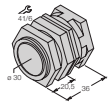
BST-30B	6947216	fixing clamp with dead-stop; material: PA6	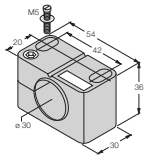
MW-30	6945005	mounting bracket; material: stainless steel A2 1.4301 (AISI 304)	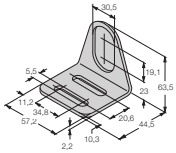
BSS-30	6901319	fixing clamp; material: polypropylene	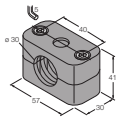

• Edition: • 08.11.2008