Inductive sensor
with extended temperature range
Bi5-EM18-AP6/S907

TURCK
Industrial Automation

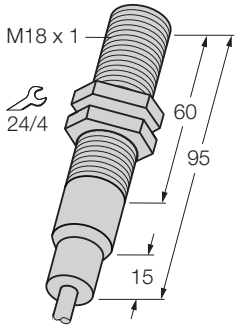

- **Threaded barrel, M18 x 1**
- **stainless steel, 1.4571**
- **for temperatures up to +160°C**
- **3-wire DC, 10…30 VDC**
- **normally open, pnp output**
- **cable connection**

Wiring diagram

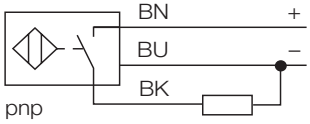

Type	Bi5-EM18-AP6/S907
Ident-No.	4617425
Rated operating distance Sn	5 mm
Mounting condition	flush
Assured sensing range	(0,81 x Sn) mm
Correction factors	St37 = 1, V2A ~ 0.7, Ms ~ 0.4, Al ~ 0.3
Repeatability	2 %
Temperature drift	± 20 %
Hysteresis	3… 15 %
Ambient temperature	-25…+ 160 °C
Operating voltage	10… 30VDC
Residual ripple	10 % U_{ss}
DC rated operational current	200 mA
Rated operational current	see derating curve
No-load current I_0	15 mA
Residual current	0.1 mA
Rated insulation voltage	0.5 kV
Short-circuit protection	yes / cyclic
Voltage drop at I_e	1.8V
Wire breakage / Reverse polarity protection	yes / complete
Output function	3-wire, normally open, pnp
Switching frequency	0.2 kHz
Housing	threaded barrel, M18 x 1
Dimensions	95 mm
Housing material	metal, AISI 316Ti
Material active face	plastic, PEEK
End cap	plastic, PTFE
Admissible pressure on front cap	10 bar
Tightening torque of housing nut	25 Nm
Connection	cable
Cable quality	Ø 3.7, PTFE, Teflon FEP, 2 m
Cable cross section:	3 x 0.34mm^2
Vibration resistance	55 Hz (1 mm)
Shock resistance	30g (11 ms)
Degree of protection	IP68 / IP69K

Functional principle
Inductive sensors are designed for wear-free and non-contact detection of metal objects. For this purpose they use a high-frequency electro-magnetic AC field that interacts with the target. With inductive sensors, this field is generated by an LC resonant circuit with a ferrite core coil. Special inductive sensors versions can be used at temperatures of -60°C up to +250°C.

derating curve

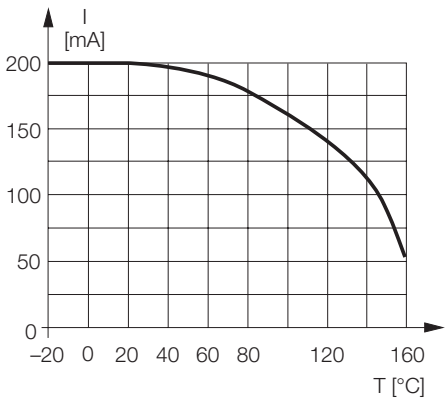

• Edition: • 08.11.2008

Inductive sensor
with extended temperature range
Bi5-EM18-AP6/S907

Mounting instructions	minimum distances
Distance D	2 x B
Distance W	3 x Sn
Distance T	3 x B
Distance S	1,5 x B
Distance G	6 x Sn

Diameter of the active area B	Ø 18 mm

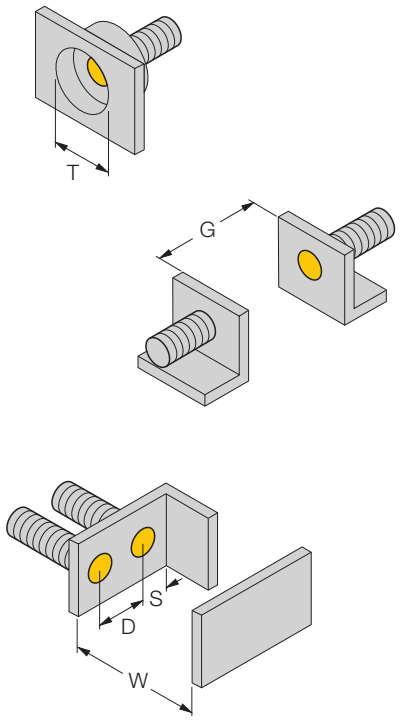

• Edition: • 08.11.2008

Inductive sensor
with extended temperature range
Bi5-EM18-AP6/S907

Industrial Automation

Accessories

Type code	Ident-No.	Short text	Dimension drawing
MW-18	6945004	mounting bracket; material: stainless steel A2 1.4301 (AISI 304)	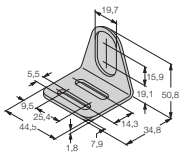

• Edition: • 08.11.2008