uprox®

# Inductive sensor
# Bi5U-EM18-AN6X-H1141

TURCK
Industrial Automation

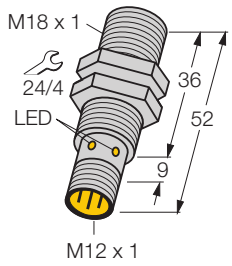


- **Threaded barrel, M18 x 1**
- **stainless steel, 1.4301**
- **factor 1 for all metals**
- **degree of protection IP68**
- **magnetic field immune**
- **extended temperature range**
- **high switching frequency**
- **3-wire DC, 10…30 VDC**
- **normally open npn output**
- **connector, M12 x 1**

| | |
|---|---|
| **Type** | Bi5U-EM18-AN6X-H1141 |
| Ident-No. | 1635350 |
| **Rated operating distance Sn** | 5 mm |
| Mounting condition | flush |
| Assured sensing range | (0,81 x Sn) mm |
| Repeatability | 2 % |
| Temperature drift | ± 10 % |
| | ± 15 %, -25 °C v ≥ +70 °C |
| Hysteresis | 3… 15 % |
| Ambient temperature | -30…+ 85 °C |
| **Operating voltage** | 10… 30VDC |
| Residual ripple | 10 % $U_{ss}$ |
| DC rated operational current | 200 mA |
| No-load current $I_0$ | 15 mA |
| Residual current | 0.1 mA |
| Rated insulation voltage | 0.5 kV |
| Short-circuit protection | yes / cyclic |
| Voltage drop at $I_e$ | 1.8V |
| Wire breakage / Reverse polarity protection | yes / complete |
| Output function | 3-wire, normally open, npn |
| Insulation class | |
| Switching frequency | 2.5 kHz |
| **Housing** | threaded barrel, M18 x 1 |
| Dimensions | 52 mm |
| Housing material | metal, AISI 304 |
| Material active face | plastic, PBT |
| Tightening torque of housing nut | 25 Nm |
| Connection | connectors, M12 x 1 |
| Vibration resistance | 55 Hz (1 mm) |
| Shock resistance | 30g (11 ms) |
| Degree of protection | IP68 |
| **Display switch state** | LED yellow |

## Wiring diagram

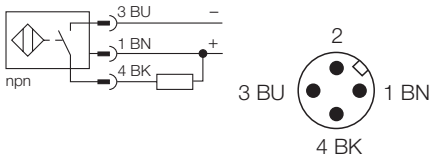


## Functional principle

Inductive sensors are designed for wear-free and non-contact detection of metal objects. Due to a ferrite-less 3-coil system, uprox factor 1 sensors have distinct advantages. They detect all metals at the same switching distance, are magnetic field immune and feature large switching distances.

• Edition: • 08.11.2008

Casp System Sp. Z o.o., Puszkina 2, 43-603 Jaworzno, Polska, www.casp.pl, e-mail: biuro@casp.pl, tel/fax: +48 32 614 09 17

# Inductive sensor
# Bi5U-EM18-AN6X-H1141

| | |
|---|---|
| **Mounting instructions** | minimum distances |
| Distance D | 2 x B |
| Distance W | 3 x Sn |
| Distance T | 3 x B |
| Distance S | 1,5 x B |
| Distance G | 6 x Sn |
| **Diameter of the active area B** | Ø 18 mm |

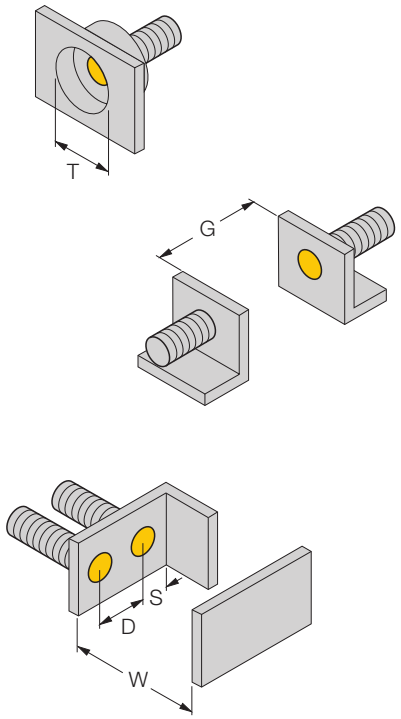


• Edition: • 08.11.2008

## Accessories

| Type code | Ident-No. | Short text | Dimension drawing |
|---|---|---|---|
| MW-18 | 6945004 | mounting bracket; material: stainless steel A2 1.4301 (AISI 304) | 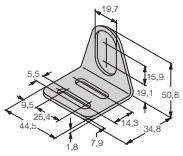  |
| BSS-18 | 6901320 | fixing clamp; material: polypropylene | 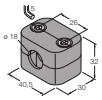  |



Casp System Sp. Z o.o., Puszkina 2, 43-603 Jaworzno, Polska, www.casp.pl, e-mail: biuro@casp.pl, tel/fax: +48 32 614 09 17