uprox®

Inductive sensor
Bi3U-M12-AN6X

TURCK
Industrial Automation

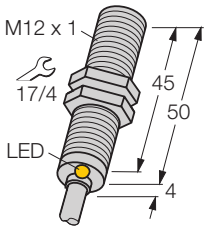

- **threaded barrel, M12 x 1**
- **Chrome-plated brass**
- **factor 1 for all metals**
- **magnetic field immune**
- **extended temperature range**
- **high switching frequency**
- **3-wire DC, 10…30 VDC**
- **normally open npn output**
- **cable connection**

Type	Bi3U-M12-AN6X
Ident-No.	1634120
Rated operating distance Sn	3 mm
Mounting condition	flush
Assured sensing range	(0,81 x Sn) mm
Repeatability	2 %
Temperature drift	± 10 %
	± 15 %, -25 °C v ≥ +70 °C
Hysteresis	3… 15 %
Ambient temperature	-30…+ 85 °C
Operating voltage	10… 30VDC
Residual ripple	10 % U_{ss}
DC rated operational current	200 mA
No-load current I_0	15 mA
Residual current	0.1 mA
Rated insulation voltage	0.5 kV
Short-circuit protection	yes / cyclic
Voltage drop at I_e	1.8V
Wire breakage / Reverse polarity protection	yes / complete
Output function	3-wire, normally open, npn
Insulation class	
Switching frequency	3 kHz
Housing	threaded barrel, M12 x 1
Dimensions	54 mm
Housing material	metal, CuZn, chrome-plated
Material active face	plastic, PBT-GF30
End cap	plastic, EPTR
Tightening torque of housing nut	10 Nm
Connection	cable
Cable quality	Ø 5.2, LifYY, PVC, 2 m
Cable cross section:	3 x 0.34mm^2
Vibration resistance	55 Hz (1 mm)
Shock resistance	30g (11 ms)
Degree of protection	IP67
Display switch state	LED yellow

Wiring diagram

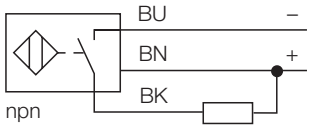

Functional principle

Inductive sensors are designed for wear-free and non-contact detection of metal objects. Due to a ferrite-less 3-coil system, uprox factor 1 sensors have distinct advantages. They detect all metals at the same switching distance, are magnetic field immune and feature large switching distances.

• Edition: • 08.11.2008

Inductive sensor
Bi3U-M12-AN6X

Mounting instructions	minimum distances
Distance D	2 x B
Distance W	3 x Sn
Distance T	3 x B
Distance S	1,5 x B
Distance G	6 x Sn
Diameter of the active area B	Ø 12 mm

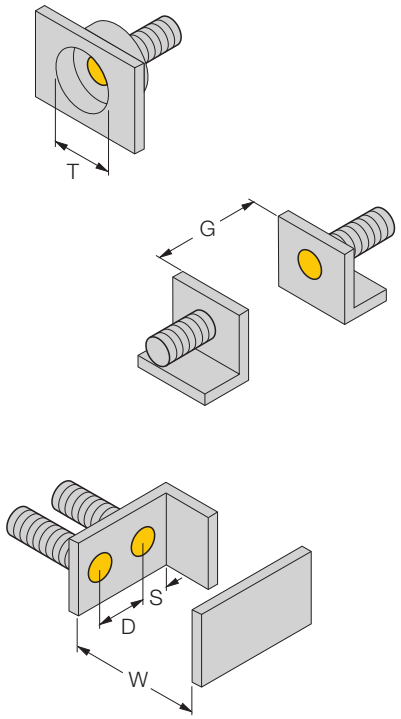

• Edition: • 08.11.2008

Accessories

Type code	Ident-No.	Short text	Dimension drawing
QM-12	6945101	quick-mount fixing clamp with dead-stop; material: chrome-plated brass male thread M16 x 1. Note: The switching distance of proximity switches can be reduced by the use of quick mounting brackets.	
BST-12B	6947212	fixing clamp with dead-stop; material: PA6	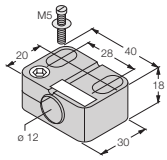
MW-12	6945003	mounting bracket; material: stainless steel A2 1.4301 (AISI 304)	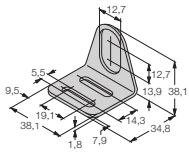
BSS-12	6901321	fixing clamp; material: polypropylene	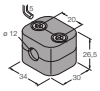

Casp System Sp. Z o.o., Puszkina 2, 43-603 Jaworzno, Polska, www.casp.pl, e-mail: biuro@casp.pl, tel/fax: +48 32 614 09 17