uprox®

Inductive sensor
Ni4U-EG08-AP6X-H1341

TURCK
Industrial Automation

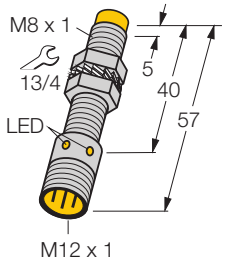

- **threaded barrel, M8 x 1**
- **stainless steel, 1.4404**
- **factor 1 for all metals**
- **degree of protection IP68**
- **magnetic field immune**
- **extended temperature range**
- **high switching frequency**
- **3-wire DC, 10…30 VDC**
- **normally open, pnp output**
- **connector, M12 x 1**

Type	Ni4U-EG08-AP6X-H1341
Ident-No.	4600640
Rated operating distance Sn	4 mm
Mounting condition	non-flush
Assured sensing range	(0,81 x Sn) mm
Repeatability	2 %
Temperature drift	± 10 %
	± 15 %, -25 °C v ≥ +70 °C
Hysteresis	3… 15 %
Ambient temperature	-30…+ 85 °C
Operating voltage	10… 30VDC
Residual ripple	10 % U_{ss}
DC rated operational current	150 mA
No-load current I_0	15 mA
Residual current	0.1 mA
Rated insulation voltage	0.5 kV
Short-circuit protection	yes / cyclic
Voltage drop at I_e	1.8V
Wire breakage / Reverse polarity protection	yes / complete
Output function	3-wire, normally open, pnp
Insulation class	
Switching frequency	2 kHz
Housing	threaded barrel, M8 x 1
Dimensions	57 mm
Housing material	metal, AISI 316L
Material active face	plastic, plastic, PA12-GF20
Tightening torque of housing nut	10 Nm
Connection	connectors, M12 x 1
Vibration resistance	55 Hz (1 mm)
Shock resistance	30g (11 ms)
Degree of protection	IP68
Display switch state	LED yellow

Wiring diagram

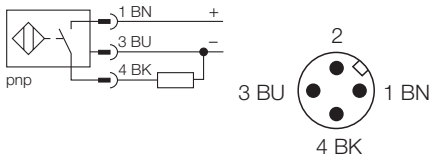

Functional principle

Inductive sensors are designed for wear-free and non-contact detection of metal objects. Due to a ferrite-less 3-coil system, uprox factor 1 sensors have distinct advantages. They detect all metals at the same switching distance, are magnetic field immune and feature large switching distances.

• Edition: • 08.11.2008

Casp System Sp. Z o.o., Puszkina 2, 43-603 Jaworzno, Polska, www.casp.pl, e-mail: biuro@casp.pl, tel/fax: +48 32 614 09 17

Inductive sensor
Ni4U-EG08-AP6X-H1341

Mounting instructions	minimum distances
Distance D	4 x B
Distance W	3 x Sn
Distance T	32 мм
Distance S	1,5 x B
Distance G	6 x Sn
Distance N	2 x Sn

Diameter of the active area B	Ø 8 mm

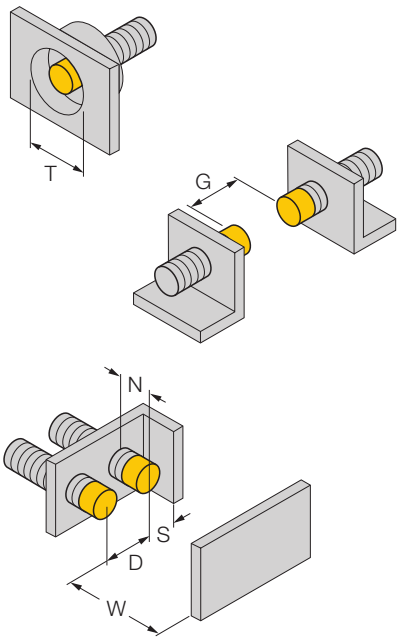

• Edition: • 08.11.2008

Accessories

Type code	Ident-No.	Short text	Dimension drawing
BST-08B	6947210	fixing clamp with dead-stop; material: PA6	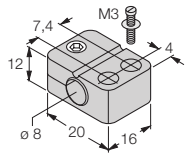
MW-08	6945008	mounting bracket; material: stainless steel A2 1.4301 (AISI 304)	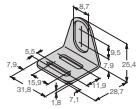
BSS-08	6901322	fixing clamp; material: polypropylene	

• Edition: • 08.11.2008