Inductive sensor
with extended switching distance
Bi2-EG08K-AP6X

Industrial Automation

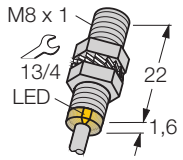

- **threaded barrel, M8 x 1**
- **stainless steel, 1.4404**
- **large detection range**
- **3-wire DC, 10…30 VDC**
- **normally open, pnp output**
- **cable connection**

Wiring diagram

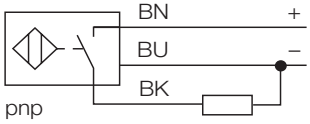

Type	Bi2-EG08K-AP6X
Ident-No.	4669400
Rated operating distance Sn	2 mm
Mounting condition	flush
Assured sensing range	(0,81 x Sn) mm
Correction factors	St37 = 1, V2A ~ 0.7, Ms ~ 0.4, Al ~ 0.3
Repeatability	2 %
Temperature drift	± 10 %
Hysteresis	3… 15 %
Ambient temperature	-25…+ 70 °C
Operating voltage	10… 30VDC
Residual ripple	10 % U_{ss}
DC rated operational current	150 mA
No-load current I_0	15 mA
Residual current	0.1 mA
Rated insulation voltage	0.5 kV
Short-circuit protection	yes / cyclic
Voltage drop at I_e	1.8V
Wire breakage / Reverse polarity protection	yes / complete
Output function	3-wire, normally open, pnp
Switching frequency	3 kHz
Housing	threaded barrel, M8 x 1
Dimensions	23.6 mm
Housing material	metal, AISI 316L
Material active face	plastic, plastic, PA12-GF20
End cap	plastic, PP
Tightening torque of housing nut	10 Nm
Connection	cable
Cable quality	Ø 4, LifYY-11Y, PUR, 2 m
Cable cross section:	3 x 0.25mm^2
Vibration resistance	55 Hz (1 mm)
Shock resistance	30g (11 ms)
Degree of protection	IP67
Display switch state	LED yellow

Functional principle

Inductive sensors are designed for wear-free and non-contact detection of metal objects. For this purpose they use a high-frequency electro-magnetic AC field that interacts with the target. With inductive sensors, this field is generated by an LC resonant circuit with a ferrite core coil.

• Edition: • 08.11.2008

Casp System Sp. Z o.o., Puszkina 2, 43-603 Jaworzno, Polska, www.casp.pl, e-mail: biuro@casp.pl, tel/fax: +48 32 614 09 17

Inductive sensor
with extended switching distance
Bi2-EG08K-AP6X

Mounting instructions	minimum distances
Distance D	2 x B
Distance W	3 x Sn
Distance T	3 x B
Distance S	1,5 x B
Distance G	6 x Sn

Diameter of the active area B	Ø 8 mm

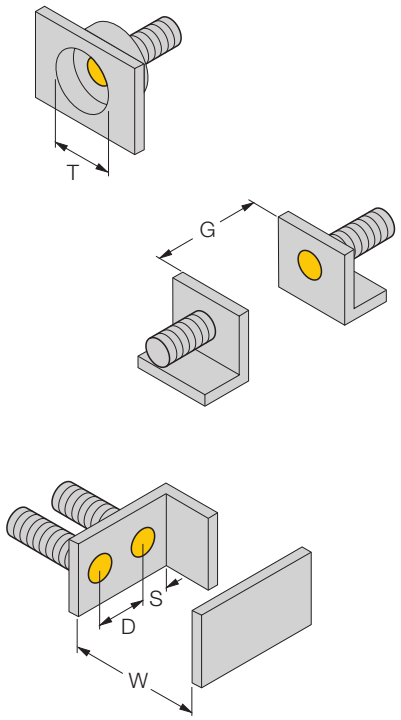

• Edition: • 08.11.2008

Inductive sensor
with extended switching distance
Bi2-EG08K-AP6X

Industrial Automation

Accessories

Type code	Ident-No.	Short text	Dimension drawing
BST-08B	6947210	fixing clamp with dead-stop; material: PA6	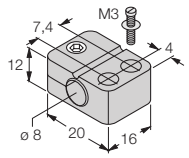
QM-08	6945100	quick-mount fixing clamp with dead-stop; material: chrome-plated brass male thread M12 x 1. Note: The switching distance of proximity switches can be reduced by the use of quick mounting brackets.	
MW-08	6945008	mounting bracket; material: stainless steel A2 1.4301 (AISI 304)	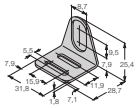
BSS-08	6901322	fixing clamp; material: polypropylene	

• Edition: • 08.11.2008