Inductive sensor
Bi1,5-EG08K-Y1-H1341

TURCK
Industrial Automation

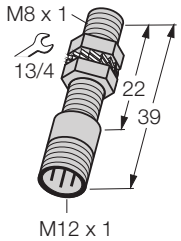

- **ATEX category II 1 G, Ex zone 0**
- **ATEX category II 1 D, Ex zone 20**
- **SIL2 as per IEC 61508**
- **threaded barrel, M8 x 1**
- **stainless steel, 1.4404**
- **2-wire DC, nom. 8.2 VDC**
- **output according to DIN EN 60947-5-6 (NAMUR)**
- **connector M12 x 1**

Wiring diagram

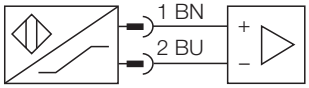

Type	Bi1,5-EG08K-Y1-H1341
Ident-No.	1003620
Rated operating distance Sn	1.5 mm
Mounting condition	flush
Assured sensing range	(0,81 x Sn) mm
Correction factors	St37 = 1, V2A ~ 0.7, Ms ~ 0.4, Al ~ 0.3
Repeatability	2 %
Temperature drift	± 10 %
Hysteresis	1… 10 %
Ambient temperature	-25…+ 70 °C
Output function	2-wire, NAMUR
Switching frequency	5 kHz
Voltage	Nom. 8.2 VDC
Non-actuated current consumption	≥ 2.1 mA
Actuated current consumption	1.2 mA
Approval acc. to	KEMA 02 ATEX 1090X issue no.: 3
Internal inductance (L_i) / capacitance (C_i)	150 nF / 150 µH
Device designation	Ex II 1 G Ex ia IIC T6/II 1 D Ex ia D 20 T95 °C (max. U_i = 20 V, I_i = 60 mA, P_i = 130 mW)
Housing	threaded barrel, M8 x 1
Dimensions	39 mm
Housing material	metal, AISI 316L
Material active face	plastic, plastic, PA12-GF20
Tightening torque of housing nut	10 Nm
Connection	connectors, M12 x 1
Vibration resistance	55 Hz (1 mm)
Shock resistance	30g (11 ms)
Degree of protection	IP67

Functional principle

Inductive sensors are designed for wear-free and non-contact detection of metal objects. For this purpose they use a high-frequency electro-magnetic AC field that interacts with the target. Conserning inductive sensors, this field is generated by an LC resonant circuit with a ferrite core coil.

• Edition: • 08.11.2008

Casp System Sp. Z o.o., Puszkina 2, 43-603 Jaworzno, Polska, www.casp.pl, e-mail: biuro@casp.pl, tel/fax: +48 32 614 09 17

Inductive sensor
Bi1,5-EG08K-Y1-H1341

Mounting instructions	minimum distances
Distance D	2 x B
Distance W	3 x Sn
Distance T	3 x B
Distance S	1,5 x B
Distance G	6 x Sn

Diameter of the active area B	Ø 8 mm

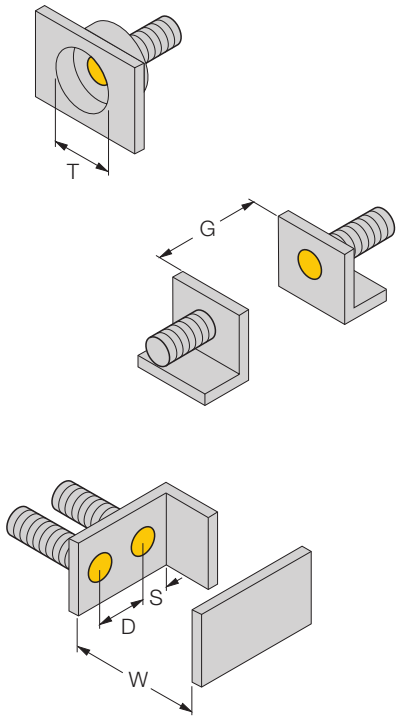

• Edition: • 08.11.2008

Inductive sensor
Bi1,5-EG08K-Y1-H1341

Industrial Automation

Accessories

Type code	Ident-No.	Short text	Dimension drawing
BST-08B	6947210	fixing clamp with dead-stop; material: PA6	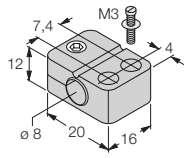
QM-08	6945100	quick-mount fixing clamp with dead-stop; material: chrome-plated brass male thread M12 x 1. Note: The switching distance of proximity switches can be reduced by the use of quick mounting brackets.	
MW-08	6945008	mounting bracket; material: stainless steel A2 1.4301 (AISI 304)	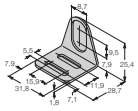
BSS-08	6901322	fixing clamp; material: polypropylene	
IM1-22EX-R	7541231	Isolating switching amplifier, 2 channel; 2 transistor outputs; input for NAMUR signals; selectable ON/ OFF mode for wire-break and short-circuit monitoring; adjustable signal flow (N.O./ N.C.mode); removable terminal blocks; 18 mm width; universal voltage supply unit	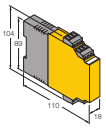

• Edition: • 08.11.2008

Inductive sensor
Bi1,5-EG08K-Y1-H1341

Industrial Automation

Operating manual

Intended usage

This device fulfils the directive 94/9/EC and is suited for use in explosion hazardous areas according to EN60079-0, -11, -26 and EN61241-0, -11 Further it is suited for use in safety-related systems, including SIL2 as per IEC 61508. In order to ensure correct operation to the intended purpose it is required to observe the national regulations and directives.

For use in explosion hazardous areas conform to classification

II 1 G and II 1 D (Group II, Category 1 G, electrical equipment for gaseous atmospheres and category 1 D, electrical equipment for dust atmospheres).

Marking (see device or technical data sheet)

Ⓔx II 1 G and Ex ia IIC T6 acc. to EN60079-11 and 26 and Ⓔx II 1 D Ex iaD 20 T95°C acc. to EN60079-11 and EN61241-0 and 11

Local admissible ambient temperature

-25…+70 °C

Installation / Commissioning

These devices may only be installed, connected and operated by trained and qualified staff. Qualified staff must have knowledge of protection classes, directives and regulations concerning electrical equipment designed for use in explosion hazardous areas. Please verify that the classification and the marking on the device comply with the actual application conditions.

This device is only suited for connection to approved Exi circuits compliant to EN60079-0 and -11. Please observe the maximum admissible electrical values. After connection to other circuits the sensor may no longer be used in Exi installations. When interconnected to (associated) electrical equipment, it is required to perform the "Proof of intrinsic safety" (EN60079-14). When employed in safety systems to IEC 51408 it is required to assess the failure probability (PFD) of the complete circuitry.

Installation and mounting instructions

Avoid static charging of cables and plastic devices. Please only clean the device with a damp cloth. Do not install the device in a dust flow and avoid build-up of dust deposits on the device. If the devices and the cable could be subject to mechanical damage, they must be protected accordingly. They must also be shielded against strong electro-magnetic fields. The pin configuration and the electrical specifications can be taken from the device marking or the technical data sheet. In order to avoid contamination of the device, please remove possible blanking plugs of the cable glands or connectors only shortly before inserting the cable or opening the cable socket.

Repair / maintenance

Repairs are not possible. The approval expires if the device is repaired or modified by a person other than the manufacturer. The most important data from the approval are listed.

• Edition: • 08.11.2008

Casp System Sp. Z o.o., Puszkina 2, 43-603 Jaworzno, Polska, www.casp.pl, e-mail: biuro@casp.pl, tel/fax: +48 32 614 09 17