Inductive sensor
Bi2-Q10S-AP6X

Industrial Automation

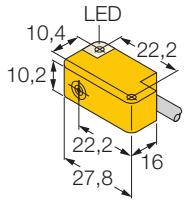

- **rectangular, height 10.2 mm**
- **side active face**
- **cable outlet to all sides possible**
- **plastic, PP-GF20**
- **3-wire DC, 10…30 VDC**
- **normally open, pnp output**
- **cable connection**

Wiring diagram

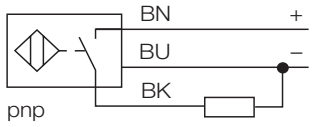

Type	Bi2-Q10S-AP6X
Ident-No.	1609360
Rated operating distance Sn	2 mm
Mounting condition	flush
Assured sensing range	(0,81 x Sn) mm
Correction factors	St37 = 1, V2A ~ 0.7, Ms ~ 0.4, Al ~ 0.3
Repeatability	2 %
Temperature drift	± 10 %
Hysteresis	3… 15 %
Ambient temperature	-25…+ 70 °C
Operating voltage	10… 30VDC
Residual ripple	10 % U_{ss}
DC rated operational current	150 mA
No-load current I_0	15 mA
Residual current	0.1 mA
Rated insulation voltage	0.5 kV
Short-circuit protection	yes / cyclic
Voltage drop at I_e	1.8V
Wire breakage / Reverse polarity protection	yes / complete
Output function	3-wire, normally open, pnp
Switching frequency	2 kHz
Housing	rectangular, Q10S
Dimensions	27.8 x 16 x 10.2 mm
Housing material	plastic, PP-GF20
Material active face	plastic, PP-GF20
Connection	cable
Cable quality	Ø 3, grey, Lif9Y-11Y, PUR, 2 m Suited for für E-ChainSystems® acc. to manufacturers declaration H1063M
Cable cross section:	3 x 0.14mm^2
Vibration resistance	55 Hz (1 mm)
Shock resistance	30g (11 ms)
Degree of protection	IP67
Display switch state	LED yellow

Functional principle

Inductive sensors are designed for wear-free and non-contact detection of metal objects. For this purpose they use a high-frequency electro-magnetic AC field that interacts with the target. Conserning inductive sensors, this field is generated by an LC resonant circuit with a ferrite core coil.

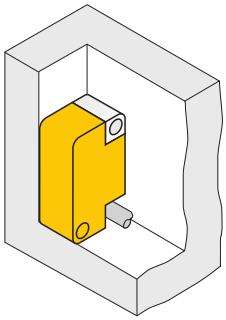

• Edition: • 08.11.2008

Casp System Sp. Z o.o., Puszkina 2, 43-603 Jaworzno, Polska, www.casp.pl, e-mail: biuro@casp.pl, tel/fax: +48 32 614 09 17

Inductive sensor
Bi2-Q10S-AP6X

Mounting instructions	minimum distances
Distance D	2 x B
Distance W	3 x Sn
Distance S	1 x B
Distance G	6 x Sn
Width of the active face B	10.2 mm

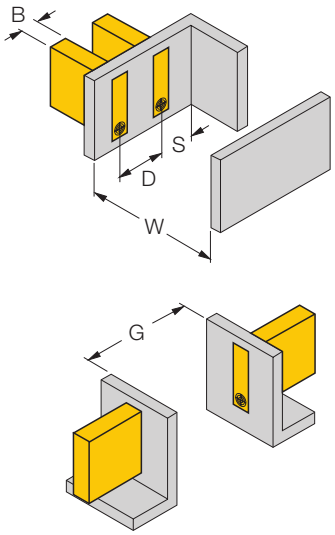

• Edition: • 08.11.2008