**Inductive Sensors**

# BES 516-3017-E4-C-S49-00,3

**cyl. D 4**
**Sn = 0,8 mm**
**DC 3-Wire**
**shielded**

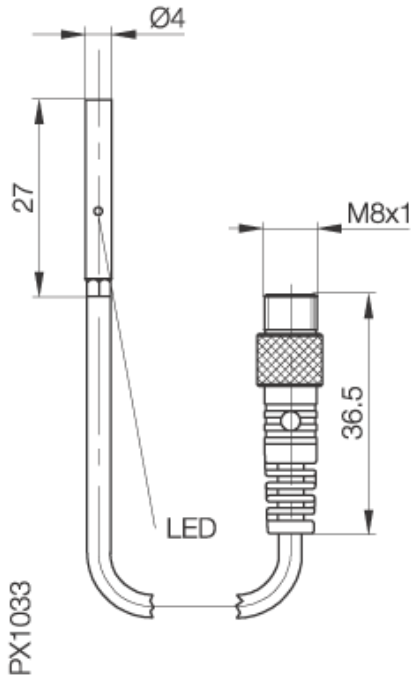


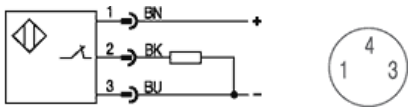


Utilization categories DC 13

Notes
When overload is removed, sensor resumes function

If not differently indicated,
all values by IEC 60947-5-2 (DIN EN60947-5-2)
Specifications subject to change


Balluff GmbH
Postfach 1160
73761 Neuhausen
Telefon (07158) 173-0
Telefax (07158) 5010


## Common Data

| | | |
|---|---|---|
| Mounting | | shielded |
| Rated operating distance Sn | mm | 0,8 |
| Assured operating distance Sa | mm | 0...0.6 |
| Repeatability | % | <= 5 |
| Hysteresis | % | <= 15 |
| Function indication | | yes |
| Ambient temperature range | °C | -25...+70 |
| Polution Degree | | 3 |
| Time delay before availability | ms | <1 |

## Mechanical Data

| | | |
|---|---|---|
| Housing size | mm | cyl. D 4 |
| Measurements BxHxT or DxT | mm | D4 x 27 |
| Housing material | | stainless steel |
| Material of sensing face | | POM |
| Degree of protection | | IP67 |
| Connection | | Cable with connector S49 |
| Cable type | | PUR, 0,3m |

## Electrical Data

| | | |
|---|---|---|
| Current type | | DC |
| Wiring | | 3-Wire |
| switching function | | normally-closed |
| Output signal | | PNP |
| Rated operational voltage | V | 24 DC |
| Rated operational current | mA | 100 |
| Supply voltage | V | 10...30 DC |
| Ripple | % | <= 10 |
| Rated supply frequency | Hz | 3000 |
| No-load supply current | mA | <= 12 |
| Off-state current | µA | <= 80 |
| Voltage drop | V | <= 3.0/- |
| Short circuit protection | | yes |
| Protected against polarity reversal | | yes |

23.05.2006 / Online-Information