**Inductive Sensors**
BES 516-3048-G-E4-C-

**cyl. D 3**
**Sn = 3 mm**
**DC 3-Wire**
**unshielded**

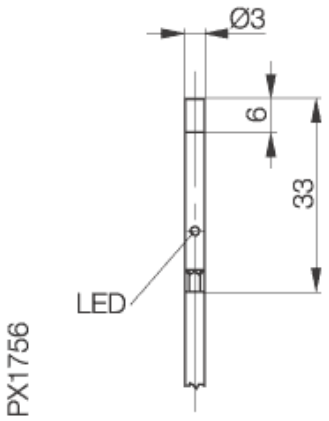


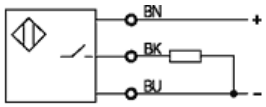


Utilization categories DC 13

Further information:
■ Hinweis EMV Schutzbeschaltung

If not differently indicated,
all values by IEC 60947-5-2 (DIN EN60947-5-2)
Specifications subject to change
Balluff GmbH
Postfach 1160
73761 Neuhausen
Telefon (07158) 173-0
Telefax (07158) 5010

## Common Data

| | | |
|---|---|---|
| Mounting | | unshielded |
| Rated operating distance Sn | mm | 3,0 |
| Assured operating distance Sa | mm | 0...2,3 |
| Function indication | | yes |
| Ambient temperature range | °C | 0...+70 |
| Time delay before availability | ms | <20 |

## Mechanical Data

| | | |
|---|---|---|
| Housing size | mm | cyl. D 3 |
| Measurements BxHxT or DxT | mm | D3 x 33 |
| Housing material | | stainless steel |
| Material of sensing face | | POM |
| Degree of protection | | 67 |
| Connection | | Cable |
| Cable type | | LifY-11Y-0, 3x0,09mm² |

## Electrical Data

| | | |
|---|---|---|
| Current type | | DC |
| Wiring | | 3-Wire |
| switching function | | normally-open |
| Output signal | | PNP |
| Rated operational voltage | V | 24 DC |
| Rated operational current | mA | 50 |
| Supply voltage | V | 21,6...26,4 DC |
| Ripple | % | <10 |
| Rated supply frequency | Hz | 3000 |
| Minimum operational current | mA | 0 |
| No-load supply current | mA | <= 10 / <= 8 |
| Off-state current | µA | <= 10 |
| Voltage drop | V | <= 2,5 / - |
| Short circuit protection | | yes |
| Protected against polarity reversal | | yes |

## EMV

| | |
|---|---|
| ESD / RFI / Burst / IVW | Burst: 1.2 Category 1 / IVW: 2.2 |

08.09.2005 / Online-Information