3SG16 compact type

Overview

3SG16 compact type

The sonar proximity switch in compact form for DC is a complete, factory-assembled unit, ready for connection. It cannot be combined with devices from the compact range.

- Operates as diffuse sensor or reflex sensor
- Foreground and background suppression
- Adjustable by means of plug-in jumpers
- Solid-state outputs:
  - 2 switching outputs
- Terminal compartment with screw terminals

Design

All components are located in a single box-shaped enclosure. The ultrasonic converter and the terminal compartment are arranged on the same enclosure level.

The electrical connections are made via screw terminals in the terminal compartment; cable entry is through an M20 cable gland.

Aligning unit

To make it easier to align the Sonar proximity switch with the object to be detected, a 3SX6 287 aligning unit is available.

This unit allows swiveling about a horizontal and a vertical axis with an angle of rotation in each case of up to 30.

Function

Range definition and adjustability

The sonar proximity switch outputs a signal while an object is located in the set operating range or inhibit range outside the blind zone (see figure).

The sensing range between 0.2 and 1 m is subdivided into 8 equal operating ranges of 0.1 m. Each operating range B1 to B8 can be selected using a connector in the terminal compartment.

The Sonar proximity switch signals with one output and one LED in each case whether objects are located in the set operating range or in the so-called inhibit range that precedes it.

With the help of the supplied programming plug, two to eight of the separate operating ranges (B1 to B8) can be combined to form an extended operating range.

The switching range is defined by two programming plugs. The plug is fitted to a pin connector in the terminal compartment of the device. The possible pin assignments are shown in the cover of the terminal compartment.

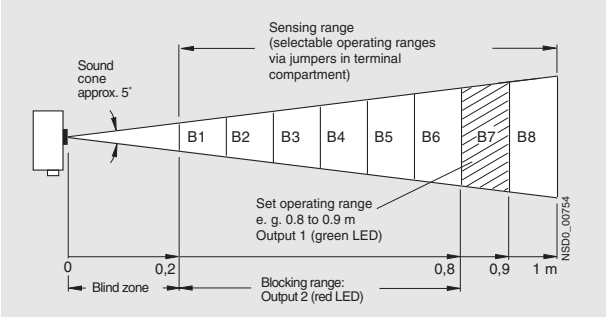

Modes

Standard operating mode, diffuse sensor

The sonar proximity switch switches when an object enters the sound cone from any direction, output 14 (NO) outputs a 1-signal if the object is located within a set operating range (B1 to B8). Output 24 (SX) outputs a 1-signal if the object is in the inhibit range. Objects in the blind zone do not cause a utilizable signal change on outputs 14 and 24.

Reflex sensor

If a reflector is permanently fixed within a set operating range, the ultrasonic beam will be interrupted by all objects in the inhibit range even those that absorb sound.

In this case, output 14 (NO) changes to the 0-signal. In the case of reflective objects in the inhibit range, output 24 (SX) changes to the 1-signal at the same time.

Casp System Sp. Z o.o., Puszkina 2, 43-603 Jaworzno, Polska, www.casp.pl, e-mail: biuro@casp.pl, tel/fax: +48 32 614 09 17

Technical specifications

Type		3SG16 compact type
Sensing range	cm	20 ... 100
Standard target	cm	2 2
Hysteresis *H*	mm	10
Repeat accuracy *R*	mm	± 2
Operational voltage (DC)	V	10 ... 35 (including ± 10% residual ripple, at 10 V to 18 V sensitivity reduced by approx. 30%)
No-load supply current I_0	mA	< 60
Switching output		
• Rated operational current I_e	mA	150
• Voltage drop	V	2
• Residual current	mA	0,01
Ultrasonic frequency	kHz	200
Switching frequency *f*	Hz	4
Response time	ms	120
Power-up delay t_v	ms	280
Switching status display		Yellow LED
Enclosure material		CRASTIN; epoxy resin converter surface
Degree of protection		IP65
Ambient temperature		
• During operation	°C	–25 ... 70
• During storage	°C	–40 ... 85

Selection and Ordering data

	Sensing range	Rated operational current	Switching output	Wiring	Order No.
	cm	mA	pnp		
Sonar proximity switches 3SG16	20 ... 100	150	2 NO	Terminal compartment B	**3SG16 67–1BJ87**
Accessories					
Aligning unit					**3SX6 287**

B: Subject to export regulations: AL = N and ECCN = EAR99

Dimensions

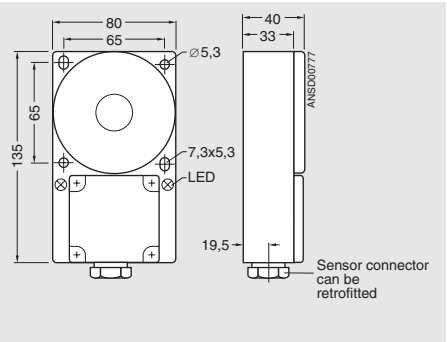

Schematics

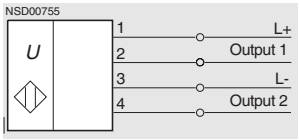

Casp System Sp. Z o.o., Puszkina 2, 43-603 Jaworzno, Polska, www.casp.pl, e-mail: biuro@casp.pl, tel/fax: +48 32 614 09 17