**Optoelectronic Sensors**
# BOS 15K-R-C50-P-S 75

BALLUFF

**Diffuse**
**29x52x13**
**Sn = 500 mm**

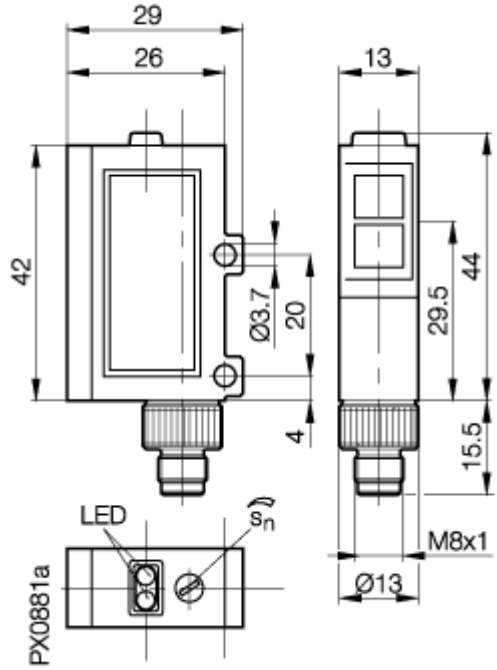


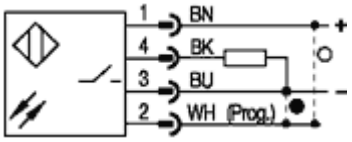


If not differently indicated,
all values by IEC 947-5-2 (DIN EN60947-5-2)

Sensing distance measured with :
Kodak white card 200mm x 200mm, 90% reflection
Specifications subject to change


Balluff GmbH
Postfach 1160
73761 Neuhausen
Telefon (07158) 173-0
Telefax (07158) 5010


## Common Data

| | | |
|---|---|---|
| Sensortype | | Diffuse |
| Switching frequence | | 500 Hz |
| Rated operating distance Sn | mm | 500 |
| asured operating distance Sa | mm | 80% from Sn |
| Repeat accuracy | | < 5% from Sn |
| Hysteresis | | < 20% |
| Indication supply voltage | | no |
| Indication switching element | | yes, red LED |
| Indication special function | | Stability indication green LED |
| Ambient temperature | °C | -15...+55°C |
| On/Off-delay | | < 1 ms |
| Light | | Infrared |
| Sensitivity adjustment | | Poti |
| Blind zone / min reflectore distance | | 1 mm |
| Permissable ambient light | lux | 3000 |

## Mechanical Data

| | | |
|---|---|---|
| Measurements BxHxT or DxT | mm | 29x52x13 |
| Shock test (EN 60068-2-27) | | Halfsinus, 30gn, 11ms |
| Vibration test (EN 60068-2-6) | | 10...55Hz, 1,5mm Amplitude 3x2h |
| Housing material | | ABS UL 94 V-O |
| Material of sensing face | | PMMA |
| Degree of protection | IP | IP66 |
| Connection | | Connector S75 (M8 4-pin) |
| Weight | | 30g |

## Electric Data

| | | |
|---|---|---|
| Current | | DC |
| Switching function | | normally-open/normally-closed |
| Output | | PNP |
| Rated operational voltage Ue | V | 24V |
| Rated operational current Ie | mA | <100mA |
| Supply voltage | V | 10-30V |
| Ripple | % | max. 6% from UB |
| Voltage drop | V | < 1,5V |
| Short protection | | yes |
| Protectde against polarity rev | | no |
| Rated insulation voltage | | 75VDC |
| max. load capacity | | 0,5 µF |

21.01.2004 / Online-Information