Optoelectronic Sensors

BOS 18KW-NA-1LOB-S4-C

BALLUFF
sensors worldwide

Diffuse
M18x1
Sn = 250 mm

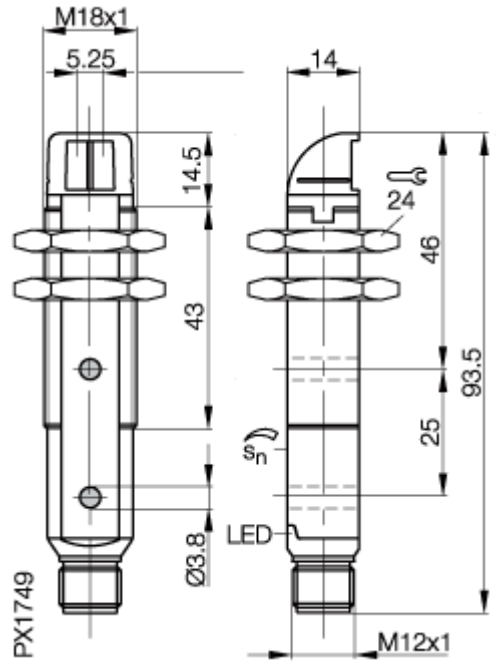

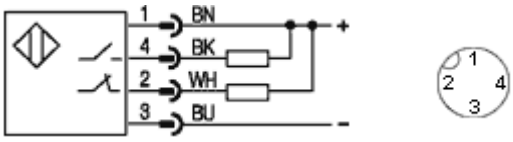

Common Data

Sensortype		Diffuse
Switching frequence		1,5 kHz
Rated operating distance Sn	mm	250
asured operating distance Sa	mm	0...250mm
Indication switching element		LED yellow
Indication special function		LED green Stability indicator
Ambient temperature	°C	-10...+50°C
On/Off-delay		0,33ms
Light		Laser, red, 650nm, Protection class 1
Sensitivity adjustment		Poti 270°
Light spot diameter		approx.0,5mm at 150mm

Mechanical Data

Measurements BxHxT or DxT	mm	M18x93,5
Shock test (EN 60068-2-27)		Halfsinus, 30gn, 11ms
Vibration test (EN 60068-2-6)		10...55Hz, 1,5mm Amplitude 3x2h
Housing material		PBT
Material of sensing face		PMMA
Degree of protection	IP	IP67
Connection		Connector S4 (M12)
Weight		25g
Recommended connector		BKS-S20-9

Electric Data

Current		DC
Switching function		normally-open/normally-closed
Output		NPN
Rated operational voltage Ue	V	24V DC
Rated operational current Ie	mA	100mA
Supply voltage	V	10-30V
Ripple	%	< 10% from UB
No-load supply current	mA	< 35
Voltage drop	V	< 2
Short protection		yes
Protectde against polarity rev		yes

Approvals CE, CURUS
Utilization categories DC13

If not differently indicated,
all values by IEC 947-5-2 (DIN EN60947-5-2)

Sensing distance measured with :
Kodak white card 200mm x 200mm, 90% reflection
Specifications subject to change

20.10.2006 / Online-Information

Balluff GmbH
Postfach 1160
73761 Neuhausen
Telefon (07158) 173-0
Telefax (07158) 5010