**Optoelectronic Sensors**
BOS 18KF-NA-1PE-S4-C

**Diffuse**
**M18x1**
**Sn = 700 mm**

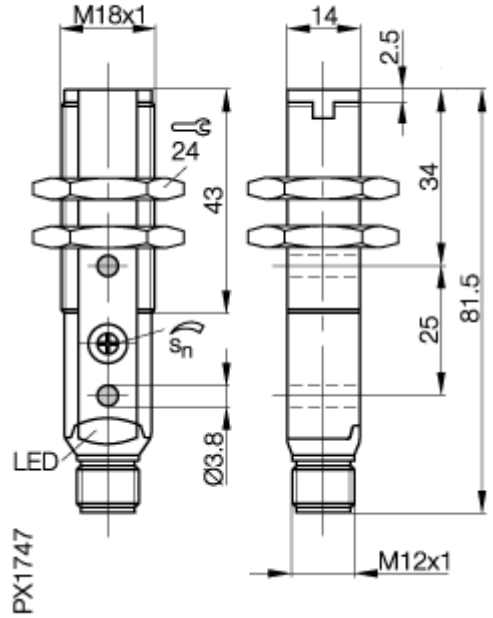


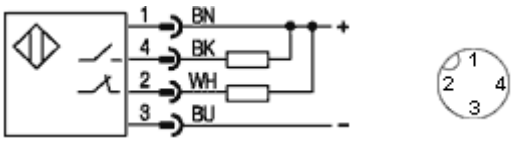


Approvals

Utilization categories DC13

If not differently indicated,
all values by IEC 947-5-2 (DIN EN60947-5-2)

Sensing distance measured with :
Kodak white card 200mm x 200mm, 90% reflection
Specifications subject to change


Balluff GmbH
Postfach 1160
73761 Neuhausen
Telefon (07158) 173-0
Telefax (07158) 5010


## Common Data

| | | |
|---|---|---|
| Sensortype | | Diffuse |
| Switching frequence | | 1 kHz |
| Rated operating distance Sn | mm | 700 |
| asured operating distance Sa | mm | 0...600mm |
| Indication switching element | | LED yellow |
| Indication special function | | LED green Stability indicator |
| Ambient temperature | °C | -25...+55°C |
| On/Off-delay | | 0,5ms |
| Light | | Infrared |
| Sensitivity adjustment | | Poti 270° |
| Light spot diameter | | approx.40mm at 600mm |

## Mechanical Data

| | | |
|---|---|---|
| Measurements BxHxT or DxT | mm | M18x81,5 |
| Shock test (EN 60068-2-27) | | Halfsinus, 30gn, 11ms |
| Vibration test (EN 60068-2-6) | | 10...55Hz, 1,5mm Amplitude 3x2h |
| Housing material | | PBT |
| Material of sensing face | | PMMA |
| Degree of protection | IP | IP67 |
| Connection | | Connector S4 (M12) |
| Weight | | 25g |
| Recommended connector | | BKS-S20-9 |

## Electric Data

| | | |
|---|---|---|
| Current | | DC |
| Switching function | | normally-open/normally-closed |
| Output | | NPN |
| Rated operational voltage Ue | V | 24V DC |
| Rated operational current Ie | mA | 100mA |
| Supply voltage | V | 10-30V |
| Ripple | % | < 10% from UB |
| No-load supply current | mA | < 35 |
| Voltage drop | V | < 2 |
| Short protection | | yes |
| Protectde against polarity rev | | yes |

21.01.2004 / Online-Information