Optoelectronic Sensors
BOS 18M-PU-1PD-SA 5-C

Diffuse
M18x1
Sn = 400 mm

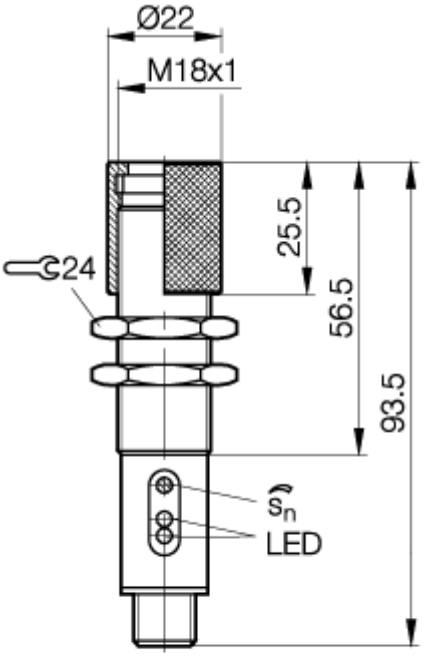

PX0891

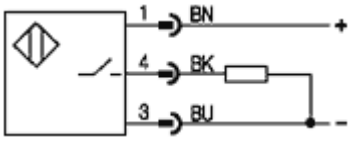

If not differently indicated,
all values by IEC 947-5-2 (DIN EN60947-5-2)

Sensing distance measured with :
Kodak white card 200mm x 200mm, 90% reflection
Specifications subject to change

Balluff GmbH
Postfach 1160
73761 Neuhausen
Telefon (07158) 173-0
Telefax (07158) 5010

Common Data

Sensortype		Diffuse
Switching frequence		1 kHz
Rated operating distance Sn	mm	400
asured operating distance Sa	mm	adjustable
Repeat accuracy		< 5% from Sn
Hysteresis		< 10%
Indication switching element		yes, yellow LED
Ambient temperature	°C	-5...+55°C
On/Off-delay		< 0,5 ms
Light		Infrared
Sensitivity adjustment		Poti
Blind zone / min reflectore distance		5 mm
Permissable ambient light	lux	10000

Mechanical Data

Measurements BxHxT or DxT	mm	M18x62...111
Shock test (EN 60068-2-27)		Halfsinus, 30gn, 11ms
Vibration test (EN 60068-2-6)		10...55Hz, 1,5mm Amplitude 3x2h
Housing material		nickel plated brass
Material of sensing face		PMMA
Degree of protection	IP	IP67
Connection		Connector S4 (M12)
Weight		100g
Recommended connector		BKS-S 19/BKS-S 20

Electric Data

Current		DC
Switching function		switchable
Output		PNP
Rated operational current Ie	mA	200mA
Supply voltage	V	10...30V DC
Ripple	%	< 10% from UB
Voltage drop	V	<2,5V
Short protection		yes
Protectde against polarity rev		yes
Rated insulation voltage		250V AC
Output resistance		33kOhm
max. load capacity		1µF

21.01.2004 / Online-Information