Inductive Sensors
BES 516-326-E3-N

cyl. M18
Sn = 5 mm
DC 2-Wire
shielded

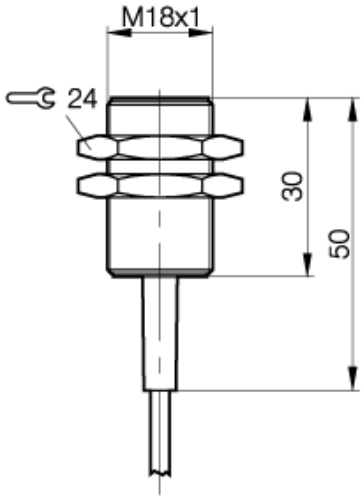

PX0554

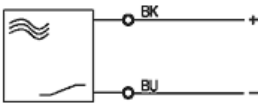

Common Data

Mounting		shielded
Rated operating distance Sn	mm	5,0
Assured operating distance Sa	mm	0...4
Repeatability	%	<= 5
Hysteresis	%	<= 10
Ambient temperature range	°C	-25...+70
Polution Degree		3
IEC-Code		I1A18SD1N
Time delay before availability	ms	<= 10

Mechanical Data

Housing size	mm	cyl. M18
Measurements BxHxT or DxT	mm	M18x1 x 50
Housing material		nickel plated brass
Material of sensing face		PBTP
Degree of protection		IP67
Connection		Cable
Cable type		LifYY-O

Electrical Data

Current type		DC
Wiring		2-Wire
switching function		normally-closed
Output signal		NAMUR
Rated operational voltage	V	8.2 DC
Rated supply frequency	Hz	DC
Rated supply frequency	Hz	500

21.01.2004 / Online-Information

If not differently indicated,
all values by IEC 60947-5-2 (DIN EN60947-5-2)
Specifications subject to change
Balluff GmbH
Postfach 1160
73761 Neuhausen
Telefon (07158) 173-0
Telefax (07158) 5010