Inductive Sensors

BES 516-300-S 205-D-PU-03

cyl. M12
Sn = 1,5 mm
DC 3-Wire
shielded

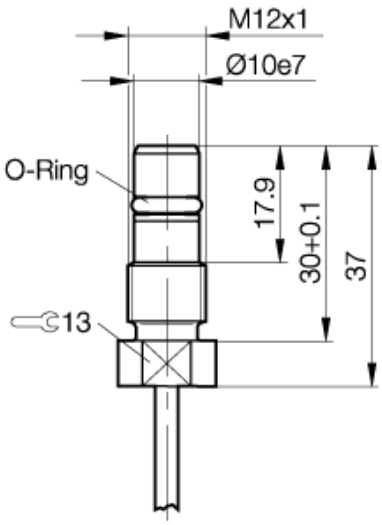

PX0395

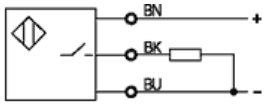

Utilization categories DC 13

Common Data

Mounting		shielded
Rated operating distance Sn	mm	1,5
Assured operating distance Sa	mm	0...1.2
Repeatability	%	<= 5
Hysteresis	%	<= 15
Ambient temperature range	°C	-25...+80
Polution Degree		3
IEC-Code		I1X12AP1
Time delay before availability	ms	<= 10
Particular characteristics		pressure rated to 350 bar

Mechanical Data

Housing size	mm	cyl. M12
Measurements BxHxT or DxT	mm	M12x1 x 37
Housing material		1.4104
Material of sensing face		EP (Duroplast)
Degree of protection		68 acc. BWN Pr 20
Connection		Cable
Cable type		LifY-Y-11Y-O

Electrical Data

Current type		DC
Wiring		3-Wire
switching function		normally-open
Output signal		PNP
Rated operational voltage	V	24 DC
Rated operational current	mA	200
Supply voltage	V	10...30 DC
Ripple	%	<= 15
Rated supply frequency	Hz	1000
No-load supply current	mA	<= 10 / <= 2
Off-state current	µA	<= 80
Voltage drop	V	<= 1.5 / -
Short circuit protection		yes
Protected against polarity reversal		yes

EMV

ESD / RFI / Burst / IVW
Emission

10.03.2005 / Online-Information

If not differently indicated,
all values by IEC 60947-5-2 (DIN EN60947-5-2)
Specifications subject to change

Balluff GmbH
Postfach 1160
73761 Neuhausen
Telefon (07158) 173-0
Telefax (07158) 5010

Casp System Sp. Z o.o., Puszkina 2, 43-603 Jaworzno, Polska, www.casp.pl, e-mail: biuro@casp.pl, tel/fax: +48 32 614 09 17