Inductive Sensors
BES 516-300-S215-PU-

BALLUFF

cyl. M12
Sn = 1,5 mm
DC 3-Wire
shielded

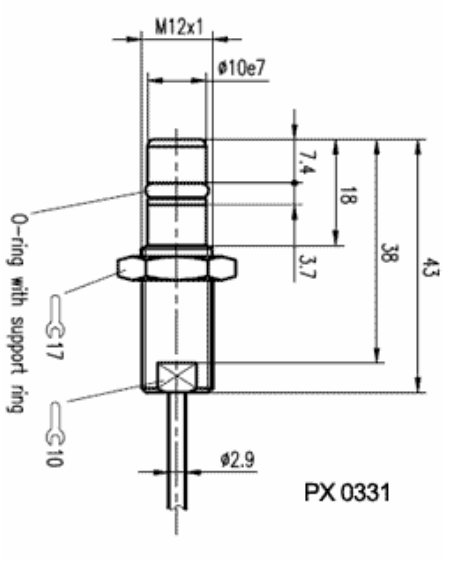

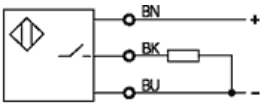

Utilization categories DC 13

Notes
When overload is removed, sensor resumes function

If not differently indicated,
all values by IEC 60947-5-2 (DIN EN60947-5-2)
Specifications subject to change
Balluff GmbH
Postfach 1160
73761 Neuhausen
Telefon (07158) 173-0
Telefax (07158) 5010

Common Data

Mounting		shielded
Rated operating distance Sn	mm	1,5
Assured operating distance Sa	mm	0...1.1
Repeatability	%	<=5
Hysteresis	%	<= 15
Function indication		no
Ambient temperature range	°C	-25...+70
Polution Degree		3
IEC-Code		I1A12AP1
Time delay before availability	ms	<= 10
Particular characteristics		pressure rated to 300 bar

Mechanical Data

Housing size	mm	cyl. M12
Measurements BxHxT or DxT	mm	M12x1 x 43
Housing material		1.4104
Material of sensing face		POM
Degree of protection		IP68 acc. BWN Pr 20
Connection		Cable
Cable type		LifY-Y-11Y-O

Electrical Data

Current type		DC
Wiring		3-Wire
switching function		normally-open
Output signal		PNP
Rated operational voltage	V	24 DC
Rated operational current	mA	200
Supply voltage	V	10...30 DC
Ripple	%	<= 15
Rated supply frequency	Hz	1000
Minimum operational current	mA	0
No-load supply current	mA	<= 15/<= 8
Off-state current	µA	<=80
Voltage drop	V	<= 2.5/-
Short circuit protection		yes
Protected against polarity reversal		yes

21.05.2004 / Online-Information