**Inductive Sensors**
# BES 516-300-S 298-S 4-D

**cyl. M12**
**Sn = 1,5 mm**
**DC 3-Wire**
**shielded**

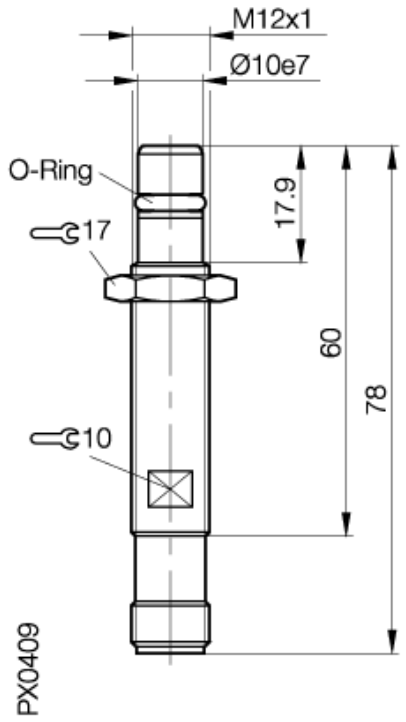


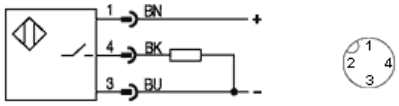


Utilization categories DC 13

## Common Data

| | | |
|---|---|---|
| Mounting | | shielded |
| Rated operating distance Sn | mm | 1,5 |
| Assured operating distance Sa | mm | 0...1.2 |
| Repeatability | % | <= 5 |
| Hysteresis | % | <= 7,5 |
| Ambient temperature range | °C | -25...+80 |
| Polution Degree | | 3 |
| IEC-Code | | I1A12AP2 |
| Time delay before availability | ms | <= 10 |
| Particular characteristics | | pressure rated to 500 bar |

## Mechanical Data

| | | |
|---|---|---|
| Housing size | mm | cyl. M12 |
| Measurements BxHxT or DxT | mm | M12x1 x 78 |
| Housing material | | 1.4104 |
| Material of sensing face | | EP (Duroplast) |
| Degree of protection | | IP68 acc. BWN Pr 20 |
| Connection | | Connector S4 |

## Electrical Data

| | | |
|---|---|---|
| Current type | | DC |
| Wiring | | 3-Wire |
| switching function | | normally-open |
| Output signal | | PNP |
| Rated operational voltage | V | 24 DC |
| Rated operational current | mA | 200 |
| Supply voltage | V | 10...30 DC |
| Ripple | % | <= 15 |
| Rated supply frequency | Hz | 1000 |
| No-load supply current | mA | <= 10 / <= 1 |
| Off-state current | µA | <= 10 |
| Voltage drop | V | <= 1.5 / - |
| Short circuit protection | | yes |
| Protected against polarity reversal | | yes |

## EMV

ESD / RFI / Burst / IVW

Emission

04.05.2005 / Online-Information

## ■ Tightening torque:

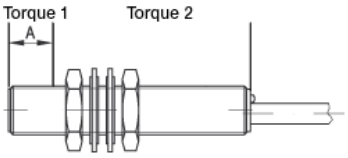


| | | |
|---|---|---|
| Torque 1 | Nm | 25 |

If only torque1 is indicated,
this applies to entire thread

If not differently indicated,
all values by IEC 60947-5-2 (DIN EN60947-5-2)
Specifications subject to change


Balluff GmbH
Postfach 1160
73761 Neuhausen
Telefon (07158) 173-0
Telefax (07158) 5010