Inductive Sensors
BES 516-113-SA 2-S 4-CW

cyl. M12
Sn = 2 mm
DC 4-Wire
shielded

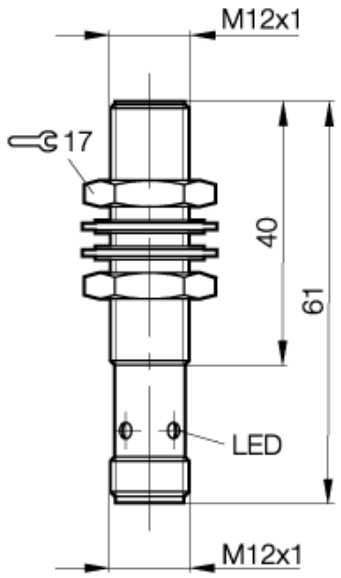

PX0103

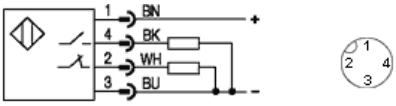

Utilization categories DC 13

Common Data

Mounting		shielded
Rated operating distance Sn	mm	2,0
Assured operating distance Sa	mm	0...1.6
Repeatability	%	<= 5
Hysteresis	%	<= 15
Function indication		yes
Ambient temperature range	°C	-25...+100
Polution Degree		3
IEC-Code		I1A12AP2
Time delay before availability	ms	<= 60
Particular characteristics		magnetic field immune

Mechanical Data

Housing size	mm	cyl. M12
Measurements BxHxT or DxT	mm	M12x1 x 61
Housing material		steel PTFE coated
Material of sensing face		PTFE
Degree of protection		IP67
Connection		Connector S4

Electrical Data

Current type		DC
Wiring		4-Wire
switching function		Complementary
Output signal		PNP
Rated operational voltage	V	24 DC
Rated operational current	mA	200
Supply voltage	V	10...30 DC
Ripple	%	<= 15
Rated supply frequency	Hz	1000
No-load supply current	mA	<= 20/<= 15
Off-state current	µA	<= 80
Voltage drop	V	<= 2.5/-
Short circuit protection		yes
Protected against polarity reversal		yes

If not differently indicated,
all values by IEC 60947-5-2 (DIN EN60947-5-2)
Specifications subject to change

Balluff GmbH
Postfach 1160
73761 Neuhausen
Telefon (07158) 173-0
Telefax (07158) 5010

03.03.2004 / Online-Information