Accesories
BOS 21-HW-2
Mounting Bracket

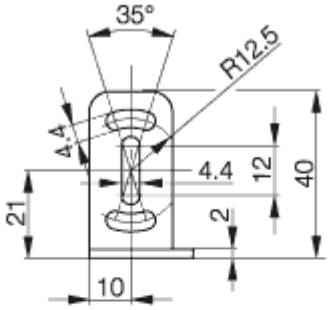

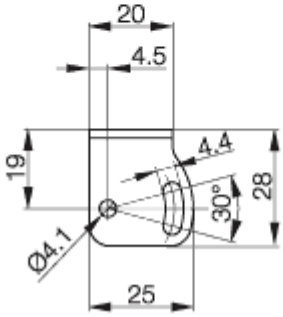

PX1962

Common Data

Application	for Optosensors series BOS 21M

Mechanical Data

Measurements BxHxT or DxT	mm	25x40x28
Housing material		stainless steel galvanized
Mounting		screws

If not differently indicated,
all values by IEC 947-5-2 (DIN EN60947-5-2)
Specifications subject to change

Balluff GmbH
Postfach 1160
73761 Neuhausen
Telefon (07158) 173-0
Telefax (07158) 5010

28.06.2004 / Online-Productinformation

BALLUFF