Accesories
BOS 18.0-KB-1
Mounting Clamp with Ball Joint

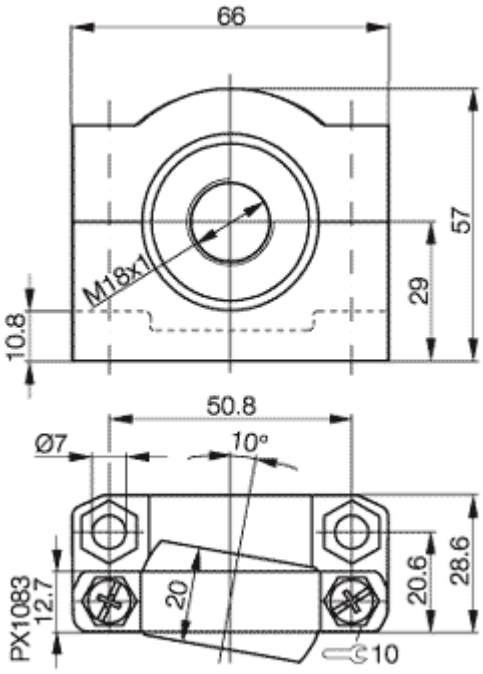

Common Data

Application	for Optosensors series BOS 18

Mechanical Data

Measurements BxHxT or DxT	mm	66x57x28.6
Mounting		two screws

If not differently indicated,
all values by IEC 947-5-2 (DIN EN60947-5-2)
Specifications subject to change

Balluff GmbH
Postfach 1160
73761 Neuhausen
Telefon (07158) 173-0
Telefax (07158) 5010

05.02.2004 / Online-Productinformation

BALLUFF