Optoelectronic Sensors
BGL 21-AH

Fork-through-beam
90x20x26
Sn = 2 mm

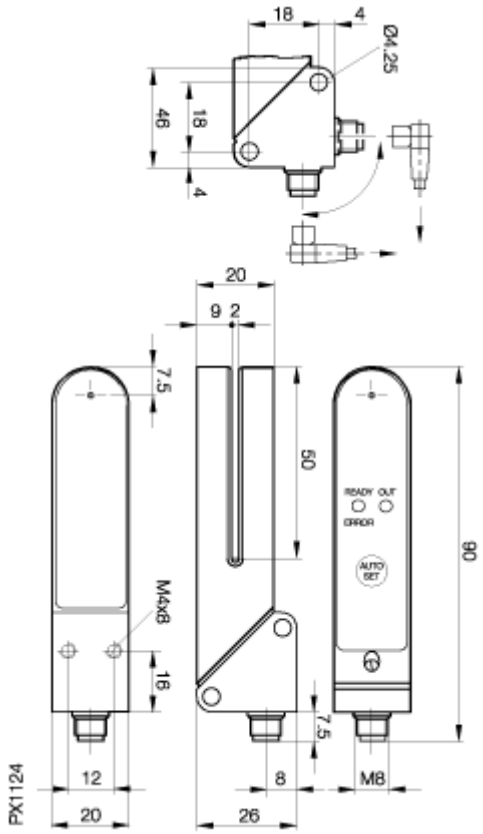

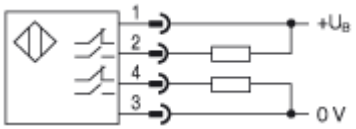

Common Data

Sensortype		Fork-through-beam
Switching frequence		7,5 kHz
Rated operating distance Sn	mm	2
asured operating distance Sa	mm	2
Resolution	mm	0,5
Indication supply voltage		yes, green LED
Indication switching element		yes, yellow LED
Indication special function		Yes, red LED (Error)
Ambient temperature	°C	0...+55°C
On/Off-delay		133µs
Light		635nm/535nm
Sensitivity adjustment		Teach in
Permissable ambient light	lux	3000-art. light, 10 000-sunlight

Mechanical Data

Measurements BxHxT or DxT	mm	90x20x26
Shock test (EN 60068-2-27)		Halfsinus, 30gn, 11ms
Vibration test (EN 60068-2-6)		10...55Hz, 1,5mm Amplitude 3x2h
Housing material		anodized aluminium
Material of sensing face		Glass
Degree of protection	IP	IP65
Connection		Connector S75 (M8 4-pin)
Weight		100g
Recommended connector		BKS-S 74, BKS-S 75

Electric Data

Current		DC
Switching function		switchable
Output		PNP/NPN
Rated operational voltage Ue	V	24V DC
Rated operational current Ie	mA	100mA
Supply voltage	V	10-30V
Ripple	%	< 6%
No-load supply current	mA	55mA
Voltage drop	V	1,2V
Short protection		yes
Protectde against polarity rev		yes
Rated insulation voltage		75V DC
max. load capacity		1µF

Approvals CE
Utilization categories DC 13

If not differently indicated,
all values by IEC 947-5-2 (DIN EN60947-5-2)

Specifications subject to change

Balluff GmbH
Postfach 1160
73761 Neuhausen
Telefon (07158) 173-0
Telefax (07158) 5010

24.07.2006 / Online-Information