Optoelectronic Sensors
BOS 15K-R-C10-02

BALLUFF

Diffuse
29x52x13
Sn = 100 mm

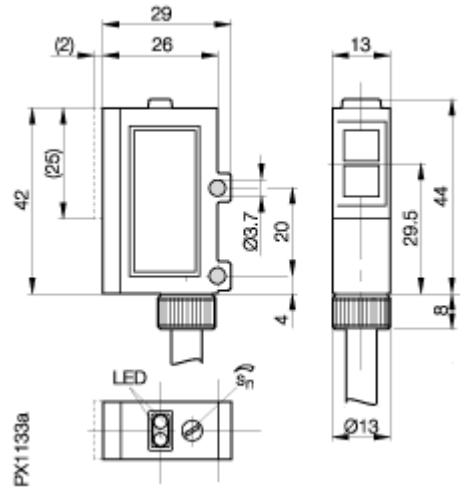

NPN

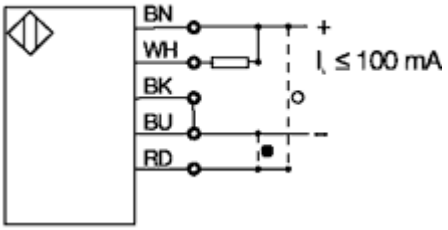

PNP

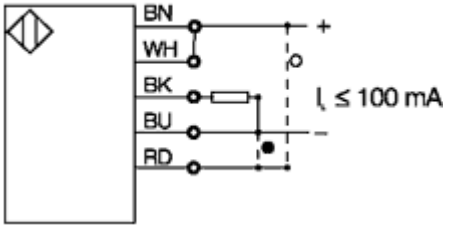

If not differently indicated,
all values by IEC 947-5-2 (DIN EN60947-5-2)

Sensing distance measured with :
Kodak white card 100mm x 100mm, 90% reflection
Specifications subject to change

Balluff GmbH
Postfach 1160
73761 Neuhausen
Telefon (07158) 173-0
Telefax (07158) 5010

Common Data

Sensortype		Diffuse
Switching frequence		500 Hz
Rated operating distance Sn	mm	100
asured operating distance Sa	mm	80% from Sn
Repeat accuracy		< 5% from Sn
Hysteresis		< 20%
Indication supply voltage		no
Indication switching element		yes, red LED
Indication special function		Stability indication green LED
Ambient temperature	°C	-15...+55°C
On/Off-delay		< 1 ms
Light		Infrared
Sensitivity adjustment		Poti
Blind zone / min reflectore distance		1 mm
Permissable ambient light	lux	3000

Mechanical Data

Measurements BxHxT or DxT	mm	29x52x13
Shock test (EN 60068-2-27)		Halfsinus, 30gn, 11ms
Vibration test (EN 60068-2-6)		10...55Hz, 1,5mm Amplitude 3x2h
Housing material		ABS UL 94 V-O
Material of sensing face		PMMA
Degree of protection	IP	IP66
Connection		Cable
Weight		85g
Type of cable		PVC

Electric Data

Current		DC
Switching function		normally-open/normally-closed
Output		PNP/NPN
Rated operational voltage Ue	V	24V
Rated operational current Ie	mA	<100mA
Supply voltage	V	10-30V
Ripple	%	max. 6% from UB
Voltage drop	V	< 1,5V
Short protection		yes
Protectde against polarity rev		no
Rated insulation voltage		75VDC
max. load capacity		0,5 µF

21.01.2004 / Online-Information