Optoelectronic Sensors
BOS 18KF-NA-1XA-C-02

Diffuse
M18x1
Sn = 100 mm

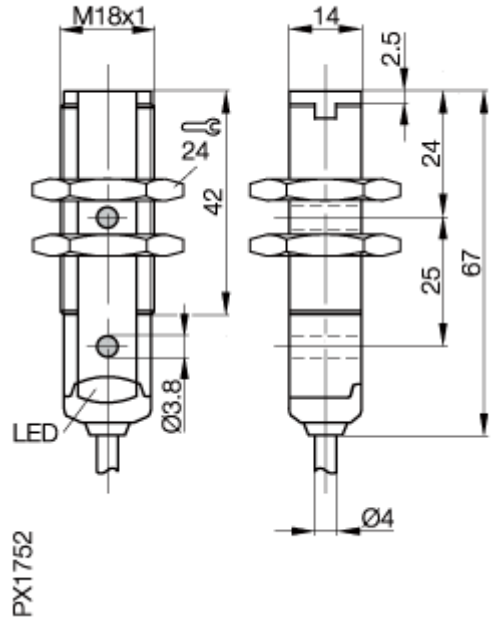

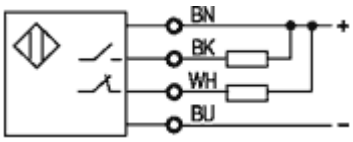

Approvals

Utilization categories DC13

If not differently indicated,
all values by IEC 947-5-2 (DIN EN60947-5-2)

Sensing distance measured with :
Kodak white card 100mm x 100mm, 90% reflection
Specifications subject to change

Balluff GmbH
Postfach 1160
73761 Neuhausen
Telefon (07158) 173-0
Telefax (07158) 5010

Common Data

Sensortype		Diffuse
Switching frequence		1 kHz
Rated operating distance Sn	mm	100
asured operating distance Sa	mm	0...100mm
Indication switching element		LED yellow
Ambient temperature	°C	-25...+55°C
On/Off-delay		0,5ms
Light		Infrared
Light spot diameter		approx.80mm at 100mm

Mechanical Data

Measurements BxHxT or DxT	mm	M18x67
Shock test (EN 60068-2-27)		Halfsinus, 30gn, 11ms
Vibration test (EN 60068-2-6)		10...55Hz, 1,5mm Amplitude 3x2h
Housing material		PBT
Material of sensing face		PMMA
Degree of protection	IP	IP67
Connection		Cable, 2m
Weight		75g
Type of cable		PVC, 4x0,14mm²

Electric Data

Current		DC
Switching function		normally-open/normally-closed
Output		NPN
Rated operational voltage Ue	V	24V DC
Rated operational current Ie	mA	100mA
Supply voltage	V	10-30V
Ripple	%	< 10% from UB
No-load supply current	mA	< 35
Voltage drop	V	< 2
Short protection		yes
Protectde against polarity rev		yes

21.01.2004 / Online-Information