Optoelectronic Sensors
BOS 18M-PS-1XB-E4-C-03

BALLUFF

Diffuse
M18x1
Sn = 200 mm

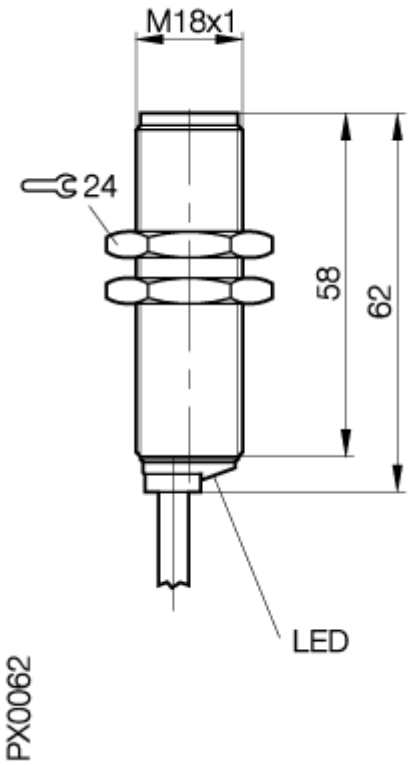

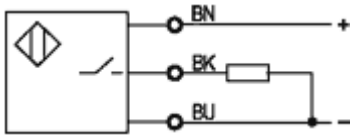

If not differently indicated,
all values by IEC 947-5-2 (DIN EN60947-5-2)

Sensing distance measured with :
Kodak white card 100mm x 100mm, 90% reflection
Specifications subject to change

Balluff GmbH
Postfach 1160
73761 Neuhausen
Telefon (07158) 173-0
Telefax (07158) 5010

Common Data

Sensortype		Diffuse
Switching frequence		100 Hz
Rated operating distance Sn	mm	200
asured operating distance Sa	mm	80% from Sn
Repeat accuracy		< 5% from Sn
Hysteresis		< 10%
Indication switching element		yes, yellow LED
Ambient temperature	°C	-5...+55°C
Light		Infrared
Blind zone / min reflectore distance		5 mm
Permissable ambient light	lux	5000

Mechanical Data

Measurements BxHxT or DxT	mm	M18x62...111
Shock test (EN 60068-2-27)		Halfsinus, 30gn, 11ms
Vibration test (EN 60068-2-6)		10...55Hz, 1,5mm Amplitude 3x2h
Housing material		nickel plated brass
Material of sensing face		PMMA
Degree of protection	IP	IP67
Connection		Cable, 3m
Type of cable		PVC

Electric Data

Current		DC
Switching function		normally-open
Output		PNP
Rated operational current Ie	mA	200mA
Supply voltage	V	10...30V DC
Ripple	%	< 10% from UB
Voltage drop	V	<2,5V
Short protection		yes
Protectde against polarity rev		yes
Rated insulation voltage		250V AC
Output resistance		33kOhm
max. load capacity		1µF

21.01.2004 / Online-Information