Optoelectronic Sensors
BOS 18M-PS-1XB-E5-C-S 4

Diffuse
M18x1
Sn = 200 mm

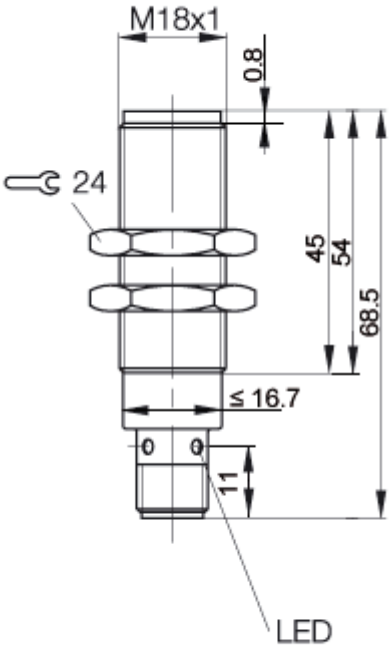

PX0064

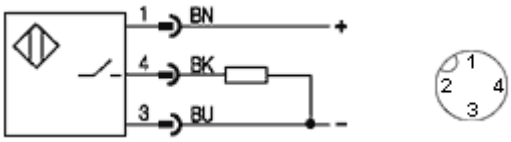

Approvals CE, c_ul_us
Utilization categories DC13
Insulation class II

If not differently indicated,
all values by IEC 947-5-2 (DIN EN60947-5-2)

Sensing distance measured with :
Kodak white card 100mm x 100mm, 90% reflection
Specifications subject to change

Balluff GmbH
Postfach 1160
73761 Neuhausen
Telefon (07158) 173-0
Telefax (07158) 5010

Common Data

Sensortype		Diffuse
Switching frequence		100 Hz
Rated operating distance Sn	mm	200
asured operating distance Sa	mm	80% from Sn
Hysteresis		< 15%
Indication switching element		yes, yellow LED
Ambient temperature	°C	-5...+55°C
Light		Infrared
Permissable ambient light	lux	5000

Mechanical Data

Measurements BxHxT or DxT	mm	M18x1 x 69
Shock test (EN 60068-2-27)		Halfsinus, 30gn, 11ms
Vibration test (EN 60068-2-6)		55Hz, 1mm Amplitude 3x30M
Housing material		nickel plated brass
Material of sensing face		PMMA
Degree of protection	IP	IP67
Connection		Connector S4 (M12)

Electric Data

Current		DC
Switching function		normally-open
Output		PNP
Rated operational current Ie	mA	200mA
Supply voltage	V	10...30V DC
Ripple	%	< 15% from Ue
Voltage drop	V	<2,5V
Short protection		yes
Protectde against polarity rev		yes
Rated insulation voltage		250V AC
Output resistance		33kOhm
max. load capacity		1µF

11.09.2006 / Online-Information