Analog Sensors
BAW R03KC-UAE40B-BP00,3-GS49

10x30
Sl = 1...4 mm
0...10V
shielded

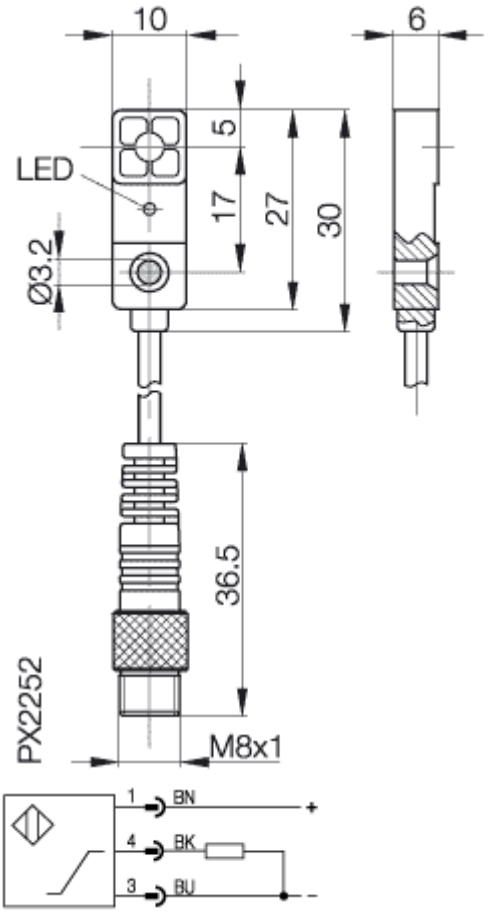

Common Data

Mounting in steel		shielded
Linearity range Sl	mm	1...4
Rated operating distance Se	mm	2,5
Repeat accuracy		±35µm
Limit frequency (-3dB)		1000Hz
Measuring velocity		⩽20m/s
Response time		0,5ms
Temperature coefficient TK	typ.	+4,7µm/K
in optimized range	min.	+1µm/K
from +10...+50°C	max.	+7µm/K
Max. non-linearity	%	⩽±150µm
Adjusting indication		ja
Ambient temperature range	°C	0...+70

Mechanical Data

Housing size	mm	10x30
Measurements BxHxT or DxT	mm	10x30x6
Housing material		PA 6
Material of sensing face		PA 6
Degree of protection	IP	IP67
Connection		Cable with Connector
Cable type		PUR

Electrical Data

Current type		DC
Wiring		3-Wire
Output signal		0...10V
Rated operational voltage	V	24 DC
Rated insulation voltage Ui	V	75 V AC
Ripple	%	<= 10% from Ue
Output resistance		5kOhm
No-load supply current	mA	<= 15
Short circuit protection		no
Protected against polarity rev		no

Approvals

If not differently indicated,
all values by IEC 947-5-2
(DIN EN60947-5-2)
Specifications subject to change

Balluff GmbH
Postfach 1160
73761 Neuhausen
Telefon (07158) 173-0
Telefax (07158) 5010

15.05.2006 / Online-Information