Analog Sensors
BAW M18MG-UAC80F-S04G

M 18
Sl = 2...8 mm
0...10V
unshielded

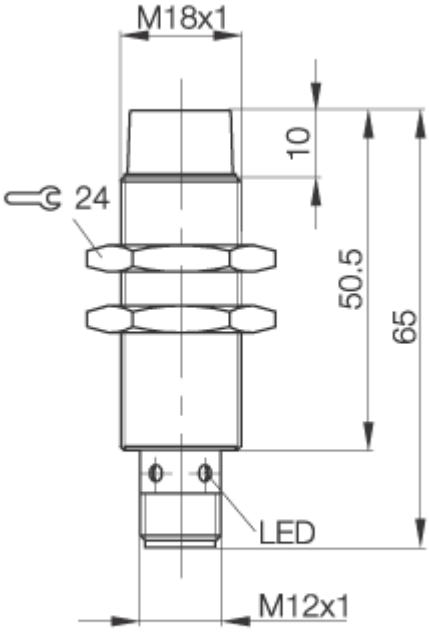

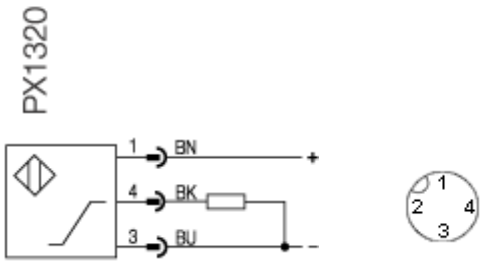

Approvals

Insulation class II

If not differently indicated,
all values by IEC 947-5-2
(DIN EN60947-5-2)
Specifications subject to change

Common Data

Mounting in steel		unshielded
Linearity range Sl	mm	2...8
Rated operating distance Se	mm	5
Repeat accuracy		± 12 µm
Linearity		≤ ± 180 µm
Limit frequency (-3dB)		500 Hz
Measuring velocity		≤20 m/s
Response time		1,5 ms
Temperature coefficient TK	typ.	-3 µm/K
in optimized range	min.	+2 µm/K
from +10...+50°C	max.	-13 µm/K
Max. non-linearity	%	±3% from Ua max.
Max. working range shift	mm	±0,5
Adjusting indication		ja
Ambient temperature range	°C	-10...+70
Time delay before availability	ms	<1ms

Mechanical Data

Housing size	mm	cyl. M 18
Measurements BxHxT or DxT	mm	M18x1 x 65
Housing material		CuZn nickel plated
Material of sensing face		PBTP
Degree of protection	IP	IP67
Connection		Connector S4
Recommended connector		BKS-S19-1/BKS-S20-1

Electrical Data

Current type		DC
Wiring		3-Wire
Output signal		0...10V
Rated operational voltage	V	24 DC
Rated insulation voltage Ui	V	250 V AC
Ripple	%	<= 15% from Ue
Output resistance		>2kOhm
No-load supply current	mA	<= 10
Short circuit protection		yes
Protected against polarity rev		yes

Balluff GmbH
Postfach 1160
73761 Neuhausen
Telefon (07158) 173-0
Telefax (07158) 5010

04.06.2004 / Online-Information