Analog Sensors
BAW M18MI-ICC50B-S04G

BALLUFF

M 18
Sl = 1...5 mm
4...20mA
shielded

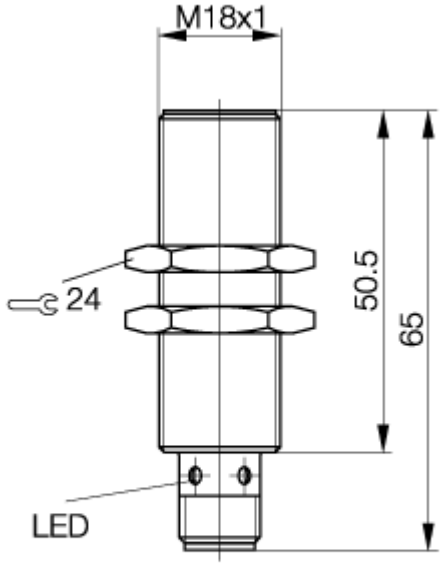

PX1356

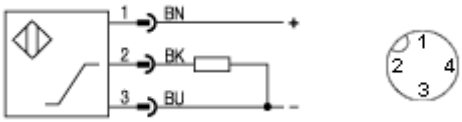

Approvals

Utilization categories DC 13
Insulation class II

If not differently indicated,
all values by IEC 947-5-2
(DIN EN60947-5-2)
Specifications subject to change

Common Data

Mounting in steel		shielded
Linearity range Sl	mm	1...5
Rated operating distance Se	mm	3
Repeat accuracy		± 8 µm
Linearity		≤ ± 120 µm
Limit frequency (-3dB)		500 Hz
Measuring velocity		≤40 m/s
Response time		1 ms
Temperature coefficient TK	typ.	-5 µm/K
in optimized range	min.	-1 µm/K
from +10...+50°C	max.	-14 µm/K
Max. non-linearity	%	±3% from Ia max.
Max. working range shift	mm	±0,3
Adjusting indication		ja
Ambient temperature range	°C	-10...+70

Mechanical Data

Housing size	mm	cyl. M 18
Measurements BxHxT or DxT	mm	M18x1 x 65
Housing material		CuZn nickel plated
Material of sensing face		PBTP
Degree of protection	IP	IP67
Connection		Connector S4
Recommended connector		BKS-S19-2/BKS-S20-2

Electrical Data

Current type		DC
Wiring		3-Wire
Output signal		4...20mA
Rated operational voltage	V	24 DC
Rated insulation voltage Ui	V	250 V AC
Ripple	%	<= 15% from Ue
Output resistance		<500 Ohm
No-load supply current	mA	<= 10
Short circuit protection		yes
Protected against polarity rev		yes

Balluff GmbH
Postfach 1160
73761 Neuhausen
Telefon (07158) 173-0
Telefax (07158) 5010

04.06.2004 / Online-Information