Inductive Sensors
BES 517-139-M4-H-S 4

Quadraform 80 x 80
Sn = 40 mm
DC 4-Wire
shielded

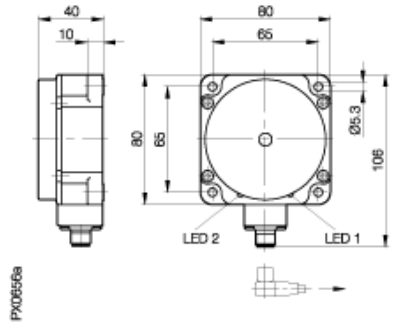

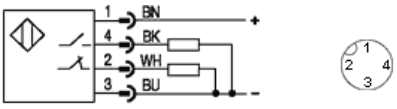

Utilization categories DC 13

If not differently indicated,
all values by IEC 60947-5-2 (DIN EN60947-5-2)
Specifications subject to change

Common Data

Mounting		shielded
Rated operating distance Sn	mm	40,0
Assured operating distance Sa	mm	0...30.6
Repeatability	%	<= 5
Hysteresis	%	<= 20
Power indication		yes
Function indication		yes
Ambient temperature range	°C	-15...+70
Polution Degree		3
IEC-Code		I1C80CP2
Time delay before availability	ms	<= 10

Mechanical Data

Housing size	mm	Quadraform 80 x 80
Measurements BxHxT or DxT	mm	80 x 80 x 40
Housing material		PBTP
Material of sensing face		PBTP
Degree of protection		IP67
Connection		Connector S4

Electrical Data

Current type		DC
Wiring		4-Wire
switching function		Complementary
Output signal		PNP
Rated operational voltage	V	24 DC
Rated operational current	mA	200
Supply voltage	V	10...55 DC
Ripple	%	<= 15
Rated supply frequency	Hz	50
Minimum operational current	mA	-
No-load supply current	mA	<= 15/<= 12
Off-state current	µA	<= 80
Voltage drop	V	<= 2.5/-
Short circuit protection		yes
Protected against polarity reversal		yes

EMV

ESD/RFI/Burst/IVW
Emission

21.01.2004 / Online-Information

Balluff GmbH
Postfach 1160
73761 Neuhausen
Telefon (07158) 173-0
Telefax (07158) 5010